RajivGandhi University of Knowledge Technologies Basar .

LABORATORYMANUAL

HYDRAULIC ENGINEERING LAB

1.Measurement of coefficient of discharge through Notches (rectangular and triangular).

A. FLOW OVER RECTANGULAR NOTCH

INTRODUCTION:

Closed Circuit self sufficient portable package system rectangular notch apparatus is primarily designed to study and calibrate the notches. This unit has several advantages like this does not require any foundation, trench work etc., so that you can conduct the experiment keep the unit anywhere in the laboratory.

GENERAL DESCRIPTION:

The apparatus consists of

1. Rectangular notch
2. Piping system with a channel
3. Supply pump set
4. Measuring tank
5. Sill level measuring arrangement
6. Sump

CONSTRUCTIONAL SPECIFICATION

FLOW SYSTEM

Consists of rectangular notches provided for experiments. The notch has the channel of 150mm*150mm

SUPPLY PUMP SET

Is rigidly fixed on sump. The mono block pump with motor. Operating on single phase 220/240 volts 50 Hz AC supply.

MEASURING TANK

Measuring tank with gauge glass and scale arrangement for quick and easy measurement.

SUMP

Sump to store sufficient water for independent circulation through the unit for experiment and arranged with in the floor space of the main unit.

EXPERIMENTS

The apparatus is primarily designed for conducting experiments on the Cd of notches.

PROCEDURE:

1. Close the delivery valve fully and switch on the pump
2. Measure the width of the notch for rectangular notch
3. Slowly open the delivery valve and maintain water level up to notch base and stop the pump then measure sill level note down it as H1.
4. Now start the pump and maintain a constant flow over the notch. Height over the flow should be taken as H2
5. Note down the time taken for 10cm rise of water in collecting tank. Used to get actual discharge.
6. Repeat step 3 to 5 for various reading at different heads.

IMPORTANT FORMULAS:

1. Head above the sill level or head over the notch H= H1 –H2
2. Co-efficient of discharge , Cd=Actual discharge (Qa)/Theoretical Discharge(Qthe).
3. Theoretical Discharge for Rectangular notch Qth= $\frac{2}{3}\sqrt{2g} \cdot B \cdot H^{3/2}$

B= width of the notch

4.Actual Discharge. Qa= Axh/t m3/sec

Where.,

A= Area of the measuring tank in meters=0.3m x 0.3m

H= Rise of water level in meters(10cm)

T= Time in seconds for rise of water level

TABLER FORM

S.NO	Width of the notch (m)	Sill level (H1) meters	Height of water over the notch(H2) meters	Time taken (t) Sec	Head over the notch H=H1-H2 Metre	Q act	Q the	Cd

Result:

B. FLOW OVER TRIANGULAR NOTCH

INTRODUCTION:

Closed Circuit self-sufficient portable package system triangular notch apparatus is primarily designed to study and calibrate the notches. This unit has several advantages like this does not require any foundation, trench work etc., so that you can conduct the experiment keep the unit anywhere in the laboratory.

GENERAL DESCRIPTION:

The apparatus consists of

1. Triangular notch
2. Piping system with a channel
3. Supply pump set
4. Measuring tank
5. Sill level measuring arrangement
6. Sump

CONSTRUCTIONAL SPECIFICATION

FLOW SYSTEM

Consists of triangular notches provided for experiments. The notch has the channel of 150mm*150mm

SUPPLY PUMP SET

Is rigidly fixed on sump. The mono block pump with motor. Operating on single phase 220/240 volts 50 Hz AC supply.

MEASURING TANK

Measuring tank with gauge glass and scale arrangement for quick and easy measurement.

SUMP

Sump to store sufficient water for independent circulation through the unit for experiment and arranged with in the floor space of the main unit.

EXPERIMENTS

The apparatus is primarily designed for conducting experiments on the Cd of notches.

PROCEDURE:

1. Close the delivery valve fully and switch on the pump
2. Measure the width of the notch for rectangular notch
3. Slowly open the delivery valve and maintain water level up to notch base and stop the pump then measure sill level note down it as H1.
4. Now start the pump and maintain a constant flow over the notch. Height over the flow should be taken as H2
5. Note down the time taken for 10cm rise of water in collecting tank. Used to get actual discharge.
6. Repeat step 3 to 5 for various reading at different heads.

IMPORTANT FORMULAS:

1. Head above the sill level or head over the notch H= H1 –H2
2. Co-efficient of discharge, Cd=Actual discharge (Qa)/Theoretical Discharge(Qthe).
3. Theoretical Discharge for triangular notch Qth= $\frac{8}{15}\sqrt{2g}\cdot H^{5/2}\cdot \tan\theta/2$

O= Included Angle of the triangular notch

4.Actual Discharge. Qa= Axh/t ….. m3/sec

Where.,

A= Area of the measuring tank in meters=0.3m x 0.3m
H= Rise of water level in meters(10cm)
T= Time in seconds for rise of water level

TABLER FORM

S.NO	Included angle of the notch	Sill level (H1) meters	Height of water over the notch(H2) meters	Time taken (t) Sec	Head over the notch H=H1-H2 meters	Q act	Q the	Cd

Result:

2.To investigate the reaction forces produced by the change in momentum of a fluid flow.

General Overview

Fluid mechanics has developed as an analytical discipline from the application of the classical laws of statics, dynamics and thermodynamics, to situations in which fluids can be treated as continuous media. The particular laws involved are those of the conservation of mass, energy and momentum and, in each application, these laws may be simplified in an attempt to describe quantitatively the behaviour of the fluid. The hydraulics bench service module, F1-10, provides the necessary facilities to support a comprehensive range of hydraulic models each of which is designed to demonstrate a particular aspect of hydraulic theory.

The specific hydraulic model that we are concerned with for this experiment is the Impact of Jet Apparatus, F1-16. This consists of clear acrylic test cylinder, into which water is fed vertically through a nozzle. The water strikes a target mounted on a stem. A weight pan mounted at the top of the stem allows the force of the water to be counterbalanced by applied masses. A full description of the apparatus is given later in these texts.

Equipment Diagrams

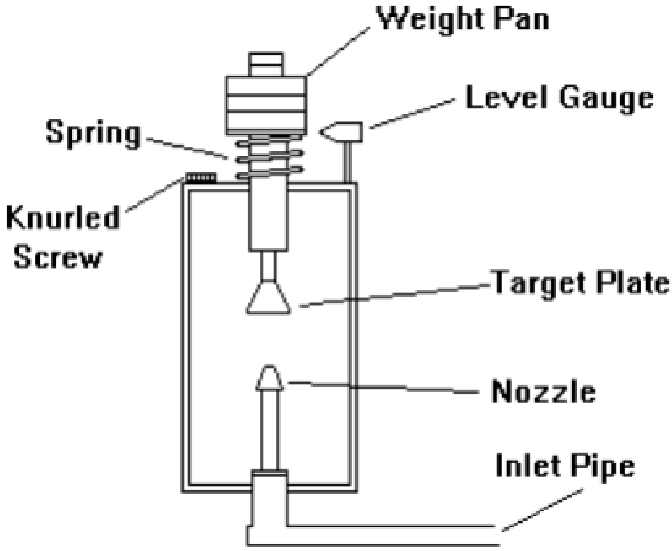

Figure 1: F1-16 Impact of a Jet Apparatus

Laboratory Teaching Exercises

Index to Exercises

Exercise A

Nomenclature

Name	Unit	Symbol	Type	Definition
Nozzle Diameter	m		Measured	Diameter of nozzle, in m. The diameter is measured in millimetres. Convert to metres for the calculations.
Deflector Type	Degrees		Measured	Description of the deflector type used (defined by angle of deflection).
Volume Collected	m^3	V	Measured	Taken from scale on hydraulics bench. The volume collected is measured in litres. Convert to cubic metres for the calculations (divide reading by 1000)
Time to Collect	s	t	Measured	Time to collect the known volume of water in the hydraulics bench
Applied Mass	kg	m	Measured	Mass applied to weight pan to return guide to static position
Volume Rate	m^3/s	Q_t	Calculated	$Q_t = V/t = \frac{\text{Volume Collected}}{\text{Time Taken}}$
Velocity	m/s	v	Calculated	$v = \frac{Q_t}{A}$ Velocity of the fluid leaving the nozzle
Velocity Squared	$(m/s)^2$	v^2	Calculated	Used to describe relationship between flow rate and the mass applied to balance the force
Applied Force	N	W	Calculated	Force exerted by deflector on fluid = Force due to applied mass m.
Calculated Slope from Experiment			Calculated	Slope of the graph of v^2 versus W
Slope from Theory		s	Calculated	Constant derived from $s = \rho A (\cos \theta + 1)$

Technical Data

The following dimensions from the equipment are used in the appropriate calculations. If required these values may be checked as part of the experimental procedure and replaced with your own measurements.

Diameter of nozzle: d = 0.008 m, hence

Cross sectional area of nozzle: A = 5.0265 x 10^{-5} m

IMPACT OF JET

Objective

To investigate the reaction forces produced by the change in momentum of a fluid flow.

Method

By measurement of the forces produced by a jet impinging on solid surfaces which produce different degrees of flow deflection.

Equipment

In order to complete the demonstration, we need a number of pieces of equipment.

- The F1-10 Hydraulics Bench which allows us to measure flow by timed volume collection.
- The F1-16 Impact of Jets Apparatus with 4 flow deflectors, having deflection angle of 30, 90, 120 and 180 degrees.
- A stopwatch to allow us to determine the flow rate of water (not supplied).

Theory:

The velocity of fluid, v, leaving the nozzle of cross-sectional area, A, is given by

$$v = \frac{Q_t}{A}$$

It is assumed that the magnitude of the velocity (ie. speed) does not change as fluid flows around the deflector, and that only its direction changes.

Application of Newton's 2nd law to the deflected flow gives the result:

$F_y = Q_m v(\cos\theta + 1)$, where

F_y = force exerted by deflector on fluid, and

Q_m = mass flow rate, but

$$Q_m = \rho Q_t = \rho A v, \text{ where, } Q_t = \text{volume}$$

For static equilibrium, F_y is balanced by the applied load, W (and W = mg, where m is the applied mass) hence;

$$W = \rho A v^2 (\cos\theta + 1)$$

Thus, the slope, s, of a graph of W plotted against v^2 is $s = \rho A(\cos\theta + 1)$

Note that $\theta = 180^\circ - \alpha$, where α is the flow deflection angle.

Equipment Set Up

- Remove the top plate (by releasing knurled nuts) and transparent cylinder from the impact test rig and check and record the exit diameter of the nozzle. Replace the cylinder. Screw one of the four flow deflectors (having identified its deflection angle) onto the end of the shaft. Locate the accessory in the channel of the hydraulic bench then connect the inlet tube to the bench quick release connector.

- Replace the top plate on the transparent tank but do not fit the three knurled nuts. Using the spirit level attached to the top, level the transparent tank by adjusting the feet.

- Replace the three knurled nuts then tighten in sequence to retain the top plate level - indicated by the spirit level. Care must be taken not to overtighten the knurled nuts, as this will damage the top plate- the nuts should only be tightened enough to level the plate.

- Ensure that the vertical shaft is free to move and supported by the spring beneath the weight pan.

- With no weights on the weight pan adjust the height of the level gauge until it aligns with the datum line on the weight pan. Check that the position is correct by gently oscillating the pan. (The pan should come to rest with the level gauge aligned with the datum line once more.) Place a mass of about 0.4kg on the weight pan and open the bench valve to produce a flow.

- Adjust the valve position until static equilibrium is achieved with the weight pan datum line aligned with the level gauge (check again by gently oscillating the pan). Observe (and note) the flow behaviour during the tests.

- Now carry out a measurement of volume flow rate using the volumetric tank. This is achieved by closing the ball valve and measuring (with a stopwatch) the time taken to accumulate a known volume of fluid in the tank, as measured from the sight-glass.

- You should collect fluid for at least one minute to minimize timing errors. Repeat this measurement twice to check for consistency and then average the readings.

- Repeat this procedure for a range of masses applied to the weight pan.

- Then repeat the whole test for each of the other three flow deflectors.

Note: The 30 degree target demonstrates the reduced forces at small deflection angles. Comparison with theory at this reduced deflection angle will be poor at reduced flowrates.

Exercise A

Nozzle Diameter (m)	Deflector Type α (degrees)	Volume Collected V (m^3)	Time to Collect t (sec)	Mass Applied W (k g)	Flow Rate Q_t (m^3/sec)	Velocity v (m/sec)	Velocity² v^2 $(m/s)^2$	Force F_v (Newtons)	Calculated Slope from Experiment	Slope from Theory

Conclusion:

Plot a graph of velocity*$_2$ against applied mass. Compare the slope of this graph with the slope calculated from theoretical

$$s = \rho A (\cos \theta + 1)$$

Comment on the agreement between your theoretical and experimental results and give reasons for any differences.

Comment on the significance of any experimental errors.

3. To Demonstrate Ground Water flow and the resulting Hydraulic Gradient between two different potentials.

General Overview

This bench-mounting equipment is capable of demonstrating, on a small scale, the hydrological principles of ground water flow and the applications of these to certain engineering constructions. The demonstrations are of interest to geologists and geographers concerned with sub-surface water flows.

The equipment is valuable in any practical coursework related to water resource engineering. Demonstrations of flood risks associated with land drainage works, the use of wells for water abstraction, de-watering and the drainage of lakes and polders are all readily performed.

The Armfield Ground water flow unit allows simple three dimensional flow situations to be set up quickly and measurements of piezometric levels taken at appropriate positions within the model. The following demonstrations are described in the teaching exercises included in this instruction manual:

Hydraulic gradients in ground water flow (Darcy's Law), including the effect of permeability Cone of depression for a single well in an unconfined aquifer Abstraction from a single well in confined aquifer Cone of depression for two adjacent wells, including superposition of two single wells

Dewatering an excavation site using wells

Draining a older or lake using wells

In addition to the above demonstrations, instructors and students of engineering hydrology may readily construct further model situations for study.

S11 Groundwater Flow and Well Abstraction

Equipment Diagrams

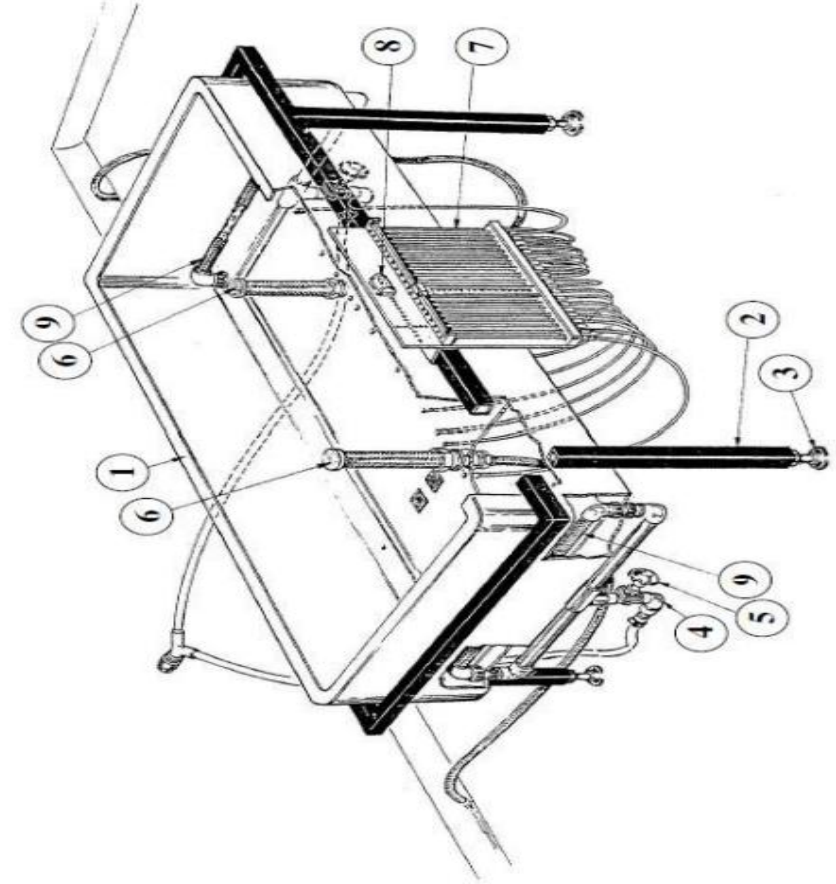

Figure 1: S11 Groundwater Flow and Well Abstraction Diagram

Equipment Specifications

Overall Dimensions

Height - 1.115m

Width - 0.585m

Depth - 0.530m

Laboratory Teaching Exercises

Index to Exercises

Piezometer tapping positions

Piezometer positions in cruciform arrangement in base of sand tank.

All dimensions in mm.

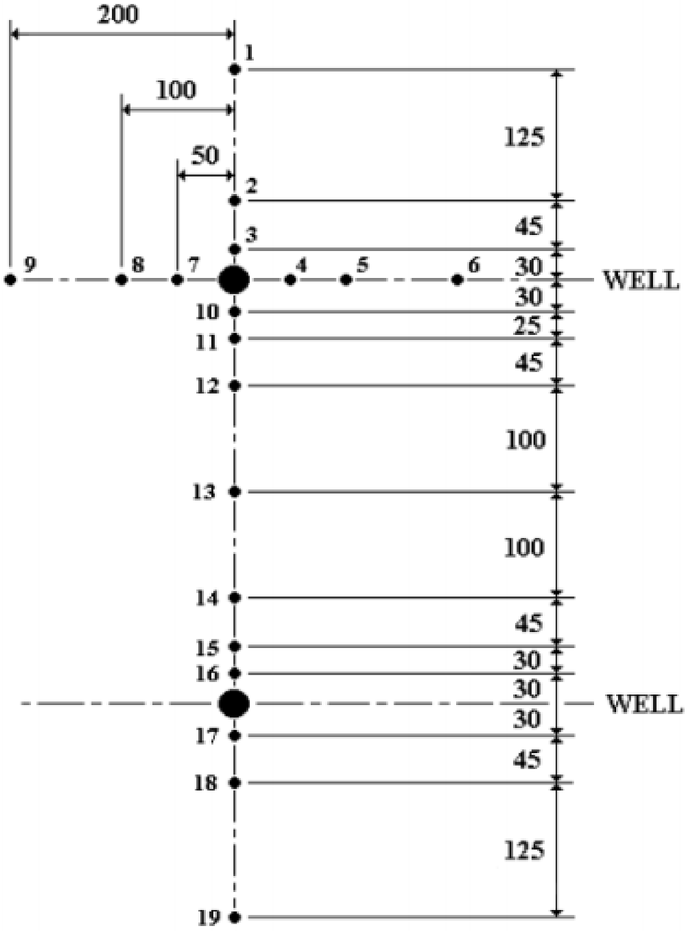

Hydraulic gradient associated with ground water flow

Objective

To demonstrate ground water flow and the resulting hydraulic gradient between two different potentials.

Equipment Required

S11 groundwater Flow/Well Abstraction Unit

0.1 m^3 of washed well graded coarse sand, range 0.6 – 2.0mm

Stopwatch (not supplied)

Bucket or container for volumetric measurement (not supplied)

Theory

The linear relationship between head loss h and flow rate Q, expressed as approach velocity V is given by Darcy's Law:

$$V = k\frac{dh}{dL}$$

where V = Volumetric flow rate per unit cross-sectional area

$\frac{dh}{dL}$ = Hydraulic gradient

k = Permeability coefficient

V may also be calculated from the flow rate using the average wetted area of sand (as calculated from the water levels):

$$V = \frac{Q}{A}$$

The coefficient of permeability for the grade of sand recommended is 0.0138mms^{-1} (approximately).

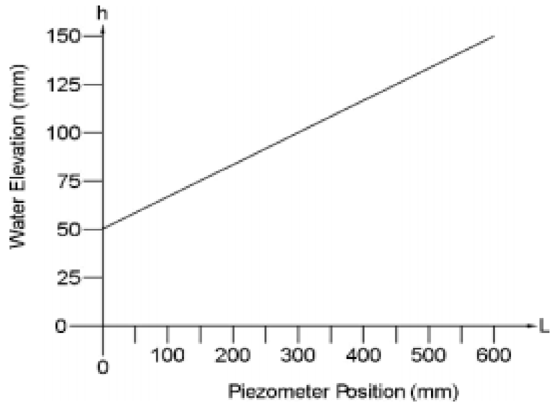

Equipment Set Up

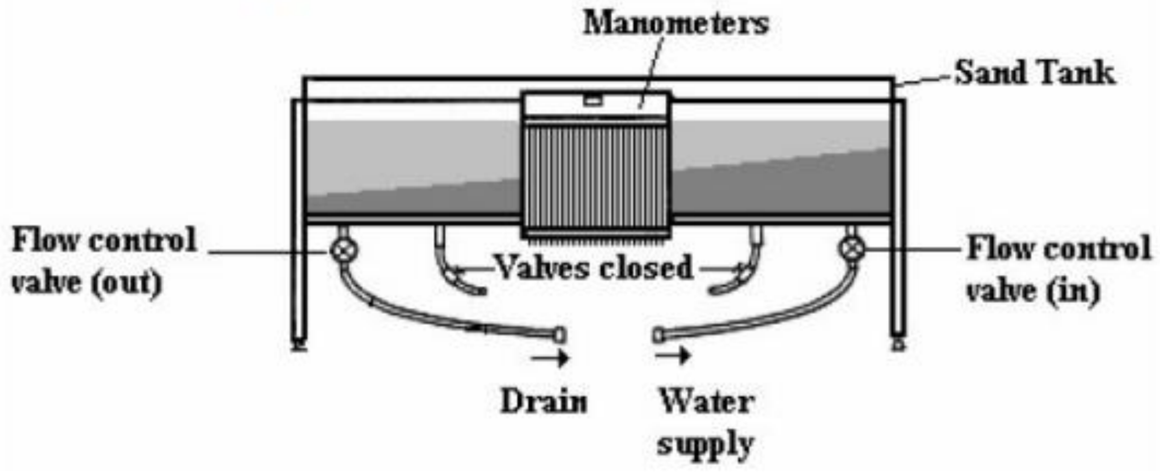

Place the sand in the sand tank and smooth the surface, to give an even depth of 150mm.

Connect the right-hand flow inlet pipe to a suitable water supply (the quick-release fitting may need to be removed to do this).

Direct the left-hand flow inlet pipe to drain. This will be the drainage tube for this experiment. Fully close the outlet valve on both well abstraction pipes. Direct the pipes to drain as a precaution.

Check that the manometer is primed.

Procedure :

1. Turn on the water supply.
2. Open the left hand flow control valve fully.
3. Adjust the right hand flow control valve until a steady head is maintained. This will be indicated by manometer tube No 13.
4. Allow conditions to stabilize for several minutes.
5. Record the manometer levels.
6. Perform a timed volume collection to measure the flow rate (Q) out of the drainage tube.
7. Repeat the procedure with a different water flowrate by closing the inlet control valve slightly. Allow conditions to stabilize for several minutes then repeat the readings.
8. Partly close the outlet flow control valve until the water level rises slightly at the left hand side of the tank. Allow the conditions to stabilise for several minutes then repeat the readings.

Results

Volume Collected ___________ m³

Time to Collect ___________ s

Flow Rate Q ___________ m/s

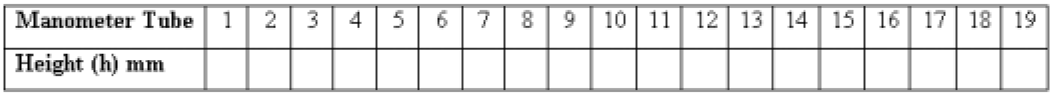

Manometer Tube	1	2	3	4	5	6	7	8	9	10	11	12	13	14	15	16	17	18	19
Height (h) mm																			

Draw a graph of water height (h) against piezometer (tapping) distance (L) from well. See Piezometer tapping positions. The graph obtained should be similar to the graph in the theory section above.

Calculate the wetted cross-sectional area of the sand.
Calculate the hydraulic gradient from the graph.
Calculate the theoretical hydraulic gradient using Darcy's Law and the measured volumetric flow rate:
(Use k = 0.013mm/s)

Conclusion

How did the hydraulic gradient obtained from the graph compare to the hydraulic gradient calculated using the measured flow rate? Give reasons for any discrepancies, and suggest changes to the experimental method that might help to reduce such discrepancies. Comment on the effect of k on the gradient.

4.To determine the cone of Depression for a single and double well in an unconfined aquifer.

General Overview

This bench-mounting equipment is capable of demonstrating, on a small scale, the hydrological principles of ground water flow and the applications of these to certain engineering constructions. The demonstrations are of interest to geologists and geographers concerned with sub-surface water flows.

The equipment is valuable in any practical coursework related to water resource engineering. Demonstrations of flood risks associated with land drainage works, the use of wells for water abstraction, de-watering and the drainage of lakes and polders are all readily performed.

The Armfield Ground water flow unit allows simple three dimensional flow situations to be set up quickly and measurements of piezometric levels taken at appropriate positions within the model. The following demonstrations are described in the teaching exercises included in this instruction manual:

Hydraulic gradients in ground water flow (Darcy's Law), including the effect of permeability Cone of depression for a single well in an unconfined aquifer Abstraction from a single well in confined aquifer Cone of depression for two adjacent wells, including superposition of two single wells

Dewatering an excavation site using wells

Draining a polder or lake using wells

In addition to the above demonstrations, instructors and students of engineering hydrology may readily construct further model situations for study.

S11 Groundwater Flow and Well Abstraction

Laboratory Teaching Exercises

Index to Exercises

Piezometer tapping positions

Piezometer positions in cruciform arrangement in base of sand tank.

All dimensions in mm.

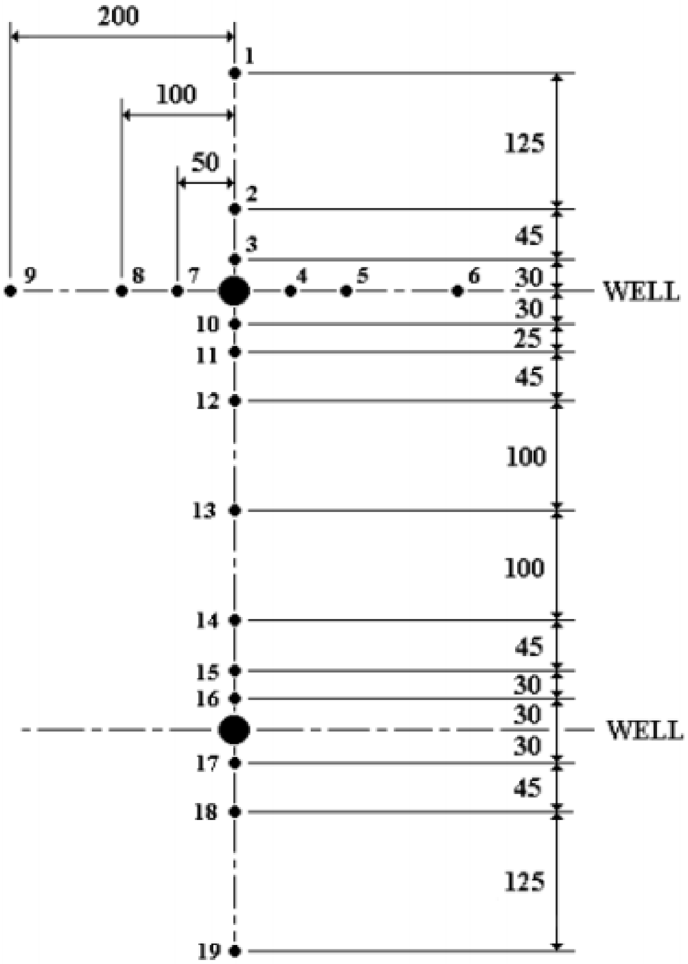

Exercise B - Cone of depression for a single well in an unconfined aquifer

Objective

To determine the Cone of Depression for a single well in an unconfined aquifer.

Equipment Required

- S11 groundwater Flow/Well Abstraction Unit
- $0.1m^3$ of washed well graded coarse sand, range 0.6 – 2.0mm
- Stopwatch (not supplied)
- Bucket or container for volumetric measurement .

Theory

In an unconfined aquifer, the piezometric surface coincides with the upper limit of the saturated zone and this is commonly termed the WATER TABLE.

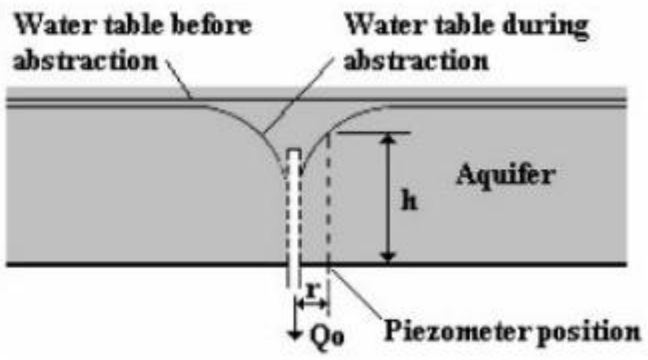

Ground water abstraction from a well will result in the lowering of the water table and at the same time, a reduction of saturated depth available for the flow of water.
The equation of flow thus becomes:

Darcy's equation: $$Q = 2\pi rhk \frac{dh}{dr}$$

where

k = Coefficient of permeability (Approx $0.013mms^{-1}$ grade of sandrecommended).

r = Radius of piezometer (m)

Q = Flow rate (m^3s^{-1})

h = Height in piezometer tube (m)

Exercise B

Equipment Set Up

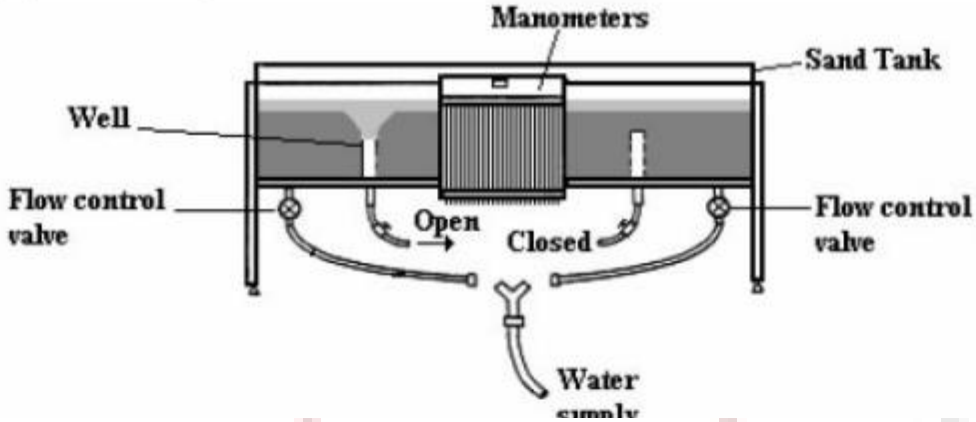

Place the sand in the sand tank and smooth the surface, to give an even depth of 150mm. Connect both inlet pipes to the Y-connector, and the Y-connector a suitable water supply. Fully close the outlet valve on both well abstraction pipes. Direct the pipes to drain. Check that the manometer is primed.

Procedure

- Turn on the water supply.
- Open the left hand well abstraction pipe valve.
- Open the left and right flow control valves, and adjust these valves until equal
- readings are obtained for manometer tubes 1 and 13.
- Perform a timed volume collection to measure the flow rate (Q) out of the well.
- Record the manometer levels.

Results

Volume Collected ___________ m^3

Time to Collect ___________ s

Flow Rate Q ___________ m/s

Manometer Tube	1	2	3	4	5	6	7	8	9	10	11	12	13	14	15	16	17	18	19
Height (h) mm																			

- ✓ Draw a graph of water height (h) against piezometer (tapping) distance (L) from well.
- ✓ See Piezometer tapping positions.
- ✓ Plot the lateral tubes 4-9 on the graph to show the three-dimensional cone of depression.

The graph obtained should be similar to the following:

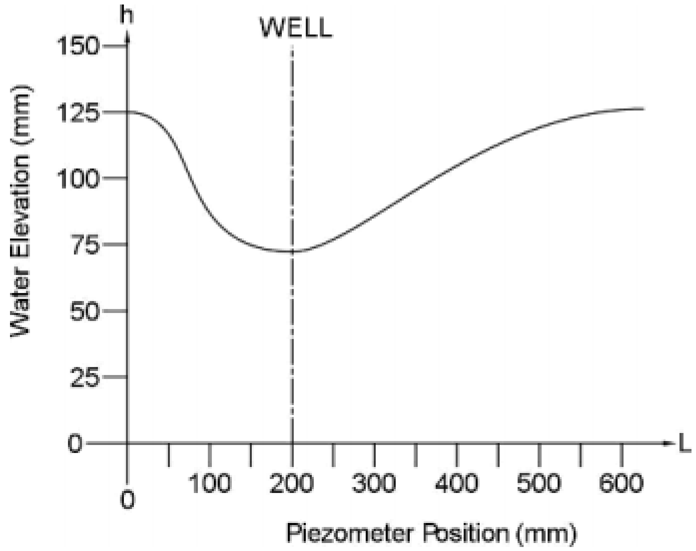

Calculate k from $Q = 2\pi r h k \frac{dh}{dr}$

Conclusion :

Did the results obtained prove Darcy's equation?

Exercise C - Cone of depression for two wells in an unconfined aquifer

Objective

To determine the Cone of Depression for two wells in an unconfined aquifer.

Equipment Required

- S11 groundwater Flow/Well Abstraction Unit
- 0.1 m_3 of washed well graded coarse sand, range 0.6 – 2.0mm

Theory

The method of superposition allows the prediction of a complex situation by considering it to be made up of a number of simple elements and superimposing their resulting individual effects. In the case of ground water flow in an unconfined aquifer with two adjacent wells, the method of superposition can be used only in its simple linear form if the separate draw downs are small compared with the saturated thickness of the aquifer.

Equipment Set Up

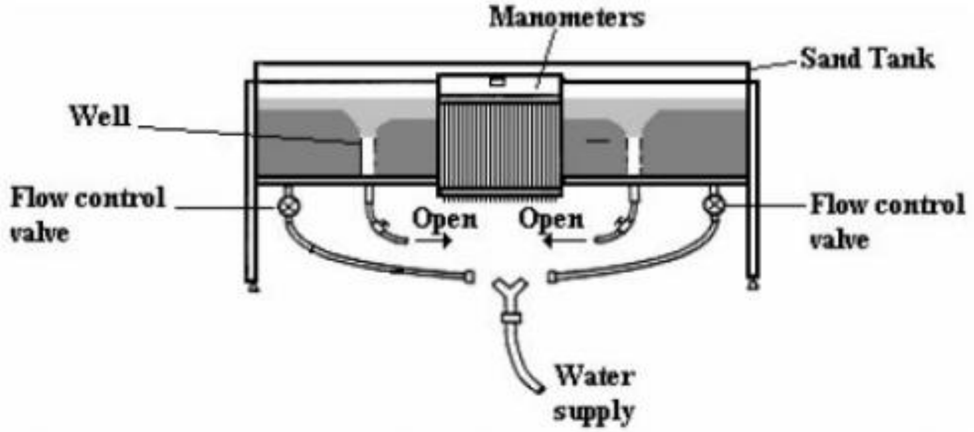

Place the sand in the sand tank and smooth the surface, to give an even depth of 150mm.

Connect both inlet pipes to the Y-connector, and the Y-connector a suitable water supply.

Direct the well abstraction pipes to drain. Close the outlet valve on both pipes.

Check that the manometer is primed.

1. Procedure:

2. Turn on the water supply.
3. Open the left hand well abstraction pipe valve.
4. Fully open the left and right flow control valves.
5. Allow several minutes for the system to stabilize.
6. Record the manometer levels.
7. Open the right hand well abstraction pipe valve. Close the left hand well abstraction pipe valve.
8. Allow several minutes for the system to stabilize.
9. Record the manometer levels.
10. Open the left hand well abstraction pipe valve. Both well pipe valves should now be open.
11. Allow several minutes for the system to stabilize.
12. Record the manometer levels.

Results

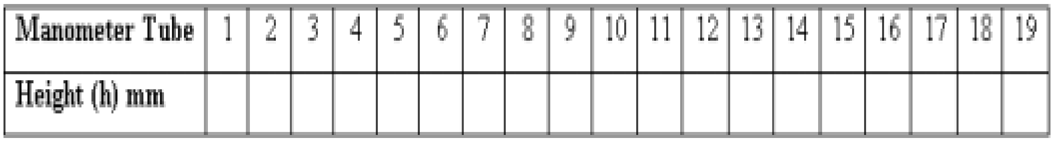

Manometer Tube	1	2	3	4	5	6	7	8	9	10	11	12	13	14	15	16	17	18	19
Height (h) mm																			

Draw a graph of water height (h) against piezometer (tapping) distance (L) from well for each of the three sets of data.

Using the highest water level as a datum, calculate the reduction in water level for each piezometric position for each of the single wells. By adding these (negative) values and subtracting the sums from the datum, calculate the superimposed readings and plot a graph of the results.

Compare the graph obtained through superposition to the graph obtained from two wells.

The graph obtained should be similar to the following:

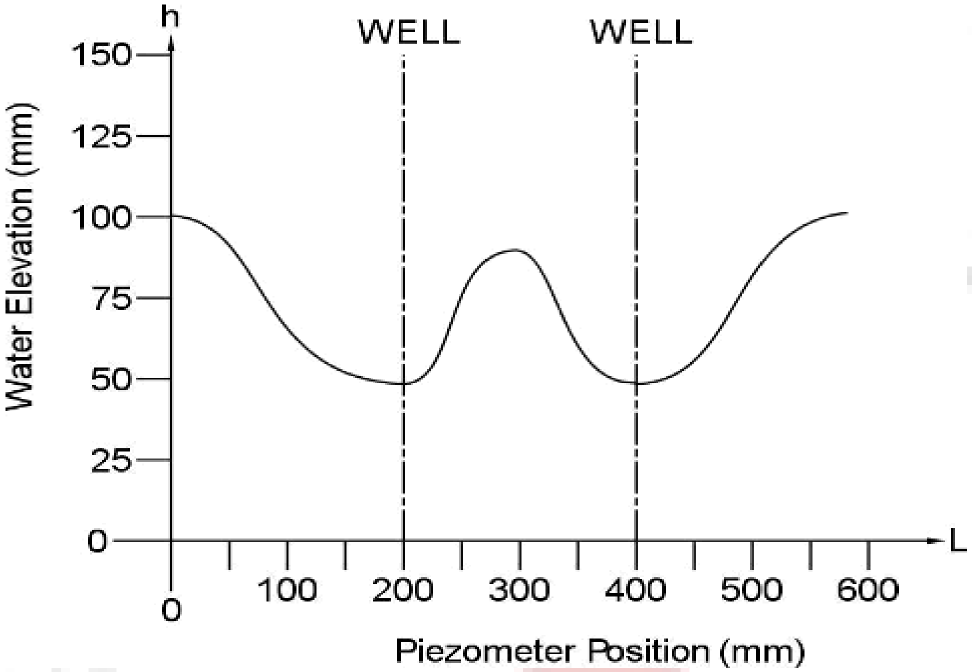

Conclusion

How similar were the results obtained from two wells and the results obtained through superposition of two single wells?

5.To Obtain the characteristic curves for an Impulse turbine operating at a range of fluid flow rates.

General Overview

This manual describes the operation of the Armfield FM60 Impulse Turbine. The FM60 is a compact impulse turbine unit which is designed to be used in conjunction with the FM6X Turbine Service Unit.

It consists of an inlet manifold which supplies water to four nozzles, jets from which act on the turbine rotor. The flow from each nozzle is independently controlled. The turbine shaft connects to a dynamometer supplied with the service unit allowing the power output to be measured.

This instruction manual must be read in conjunction with that for the FM6X Turbine Service Unit.

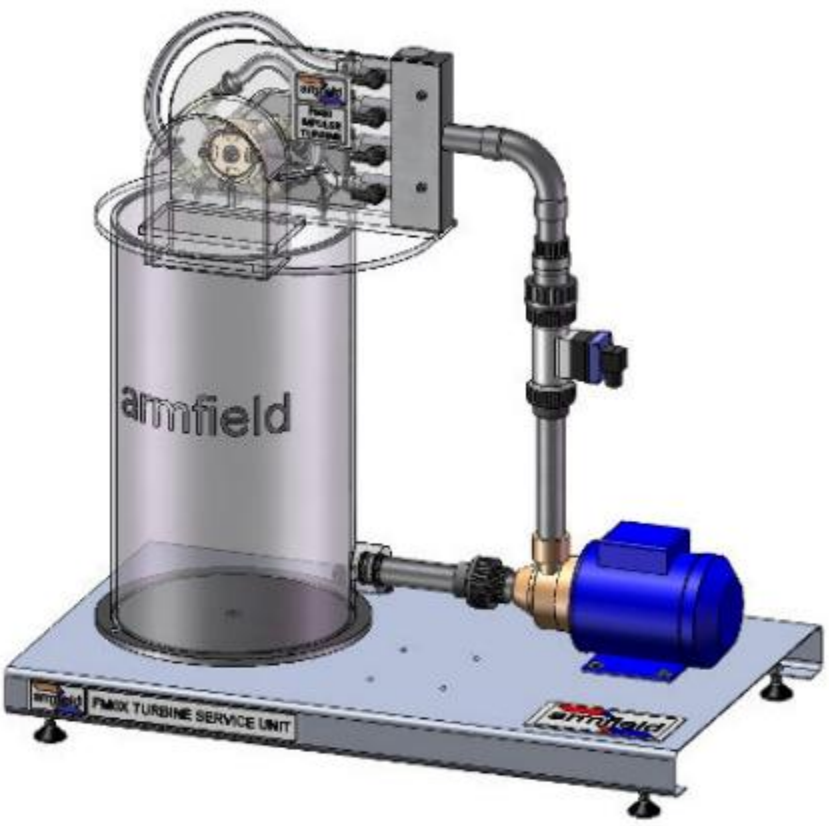

FM60 Impulse Turbine installed on the FM6X Turbine Service Unit

Equipment Diagrams

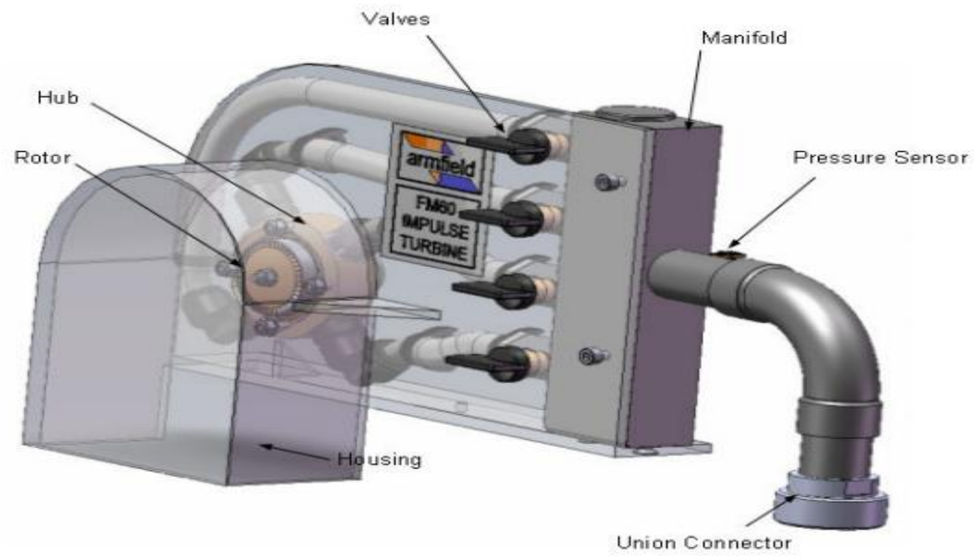

Figure 1: FM60 Impulse Turbine parts

Laboratory Teaching Exercises

Index to Exercises

Nomenclature

Name	Symbol	Unit
Water flow rate	Q	l/min
Turbine inlet pressure	P	kPa
Turbine rotational speed	n	rpm
Brake force	F	N
Brake Torque	T	Nm
Brake Power	Pb	W
Hydraulic Power	Ph	W
Efficiency	E	%
Turbine head	h	m water

Impulse Turbine Theory

In an impulse turbine the kinetic energy of a jet leaving a high pressure stationary nozzle is converted on impact with the turbine blades to rotational mechanical energy. As the water exiting the jet is at atmospheric pressure, the force exerted on the rotor is entirely due to changes in the direction of the flow of water. The impulse turbine is therefore associated with considerable changes of kinetic energy but little change in pressure energy.

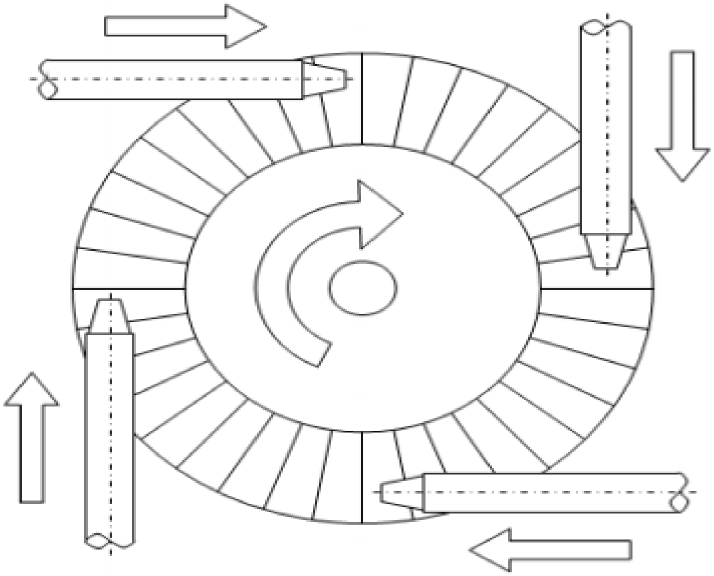

Rotor and nozzle arrangement on impulse turbine

In the case of the FM60 four independently controlled nozzles are installed around the rotor. The operating characteristics of a turbine are often conveniently shown by plotting torque T, brake power Pb, and turbine efficiency E against turbine rotational speed n for a series of volume flow rates Q, as shown below. It is important to note that the efficiency reaches a maximum and then falls, whilst the torque falls constantly and linearly. In most cases a turbine is used to drive a generator in the production of electricity. The speed of the generator is fixed to produce a given frequency of electricity. The optimum conditions for operation occur when the maximum turbine efficiency coincides with the rotational speed of the generator. As the load on the generator increases then the flow of water to the turbine must increase to maintain the required operating speed.

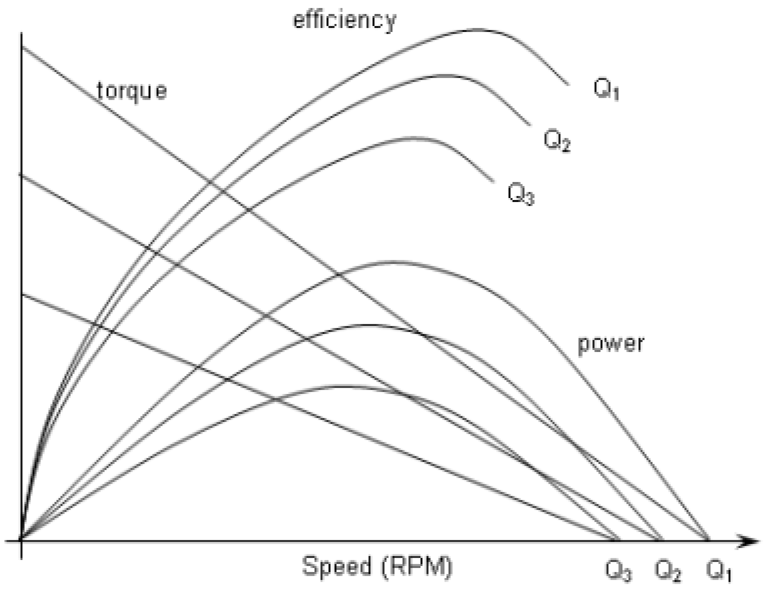

Example characteristics of a turbine at different flow rates

Energy Transfer in a Turbine

Turbines are classified in two general categories: impulse and reaction. In both types the fluid passes through a runner which deflects the flow. The momentum of the fluid in the tangential direction is changed and so a tangential force on the runner is produced. The runner therefore rotates and performs useful work, while the fluid leaves it with reduced energy. For any turbine the energy held by the fluid is initially in the form of pressure (i.e. a high level reservoir in a hydro-electric scheme). The impulse turbine has one or more fixed nozzles, in each of which this pressure is converted to the kinetic energy of an unconfined jet. The jets of fluid then impinge on the moving blades of the runner where they lose practically all their kinetic energy. The important feature of the impulse machine is that there is no change in static pressure across the runner.

Exercise A - Turbine Characteristics

Objective

To obtain the characteristic curves for a turbine operating at a range of fluid flow rates.

Theory

The basic terms used to define, and therefore measure, turbine performance in relation to rotational speed include:

i. volume flow rate,

ii. head,

iii. torque, power output and efficiencies.

Each of these is considered in turn.

Volume Flow Rate

The volume flow rate of fluid through the turbine, Q, is the volume passing through the system per unit time. This is expressed in litres per minute (l/min) but converted to cubic metres per second (m3/s) for further calculations.

Head H

The term 'head' refers to the elevation of a free surface of water above or below a reference datum. In the case of a turbine we are interested in the head of the water entering the rotor, which of course has a direct effect on the characteristics of the unit.

The input head to the turbine (h) is the head used by the turbine in performing work. The inlet pressure sensor on the FM60 measures a gauge pressure. As the outlet of the turbine is at atmospheric pressure, it can be assumed that the reading given by P is the pressure difference across the turbine. Therefore, the inlet head, h, is given by:

$$H = P/\rho g$$

Power Output and Efficiencies

The brake drum on the FM6X is free to rotate but is restrained by a torque arm which is connected to a load cell. The force measured by the load cell can be converted to a torque:

$$T = F\,r$$

Where r is the length of the torque arm (0.045m).

The brake power Pb produced by the turbine in creating a torque T on the brake at rotor speed n is given by:

$$P_b = 2\,\pi\,n\,T/60$$

The hydraulic power of the fluid is defined by:

$$Ph = \rho\ g\ h\ Q$$

Therefore an overall efficiency can be defined as:

$$E = \frac{\text{Power absorbed by brake}}{\text{'Useful' fluid power supplied}} = \frac{Pb}{Ph} \times 100\%$$

The best way to describe the operating characteristics of a turbine is through the use of characteristic curves below. This figure shows the interrelation of Torque T, Brake Power Pb, turbine efficiency E, and turbine rotational speed n, for a given turbine running at constant fluid flow rate.

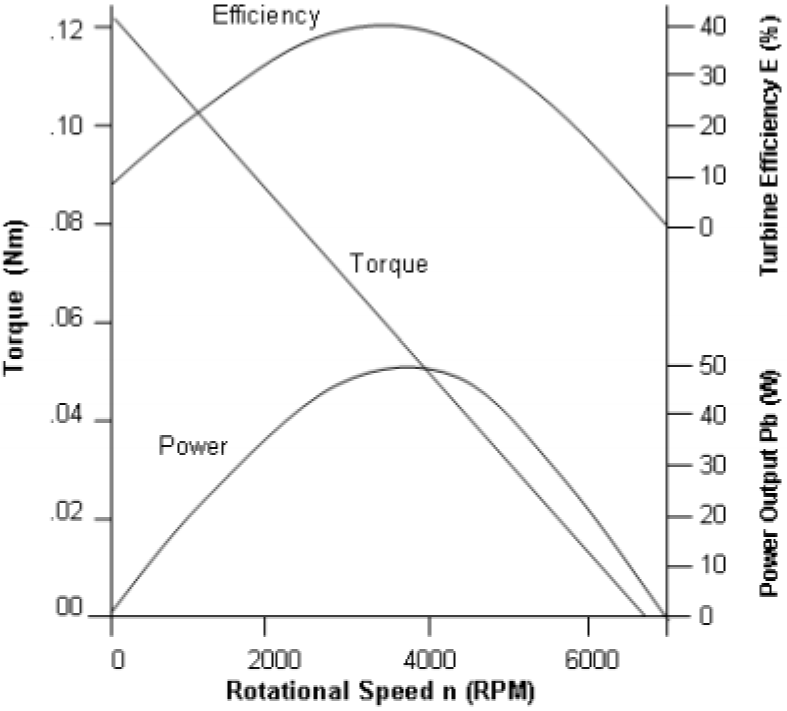

The Pb - n curve shows the relation between power output and turbine rotational speed. The E - n curve relates turbine efficiency to speed. For a turbine having the characteristics of Figure A1, maximum efficiency would occur at a speed of 3800rpm, and a power output of 50 Watts.

Manufacturers provide information on the performance of their turbines in the form of characteristic curves.

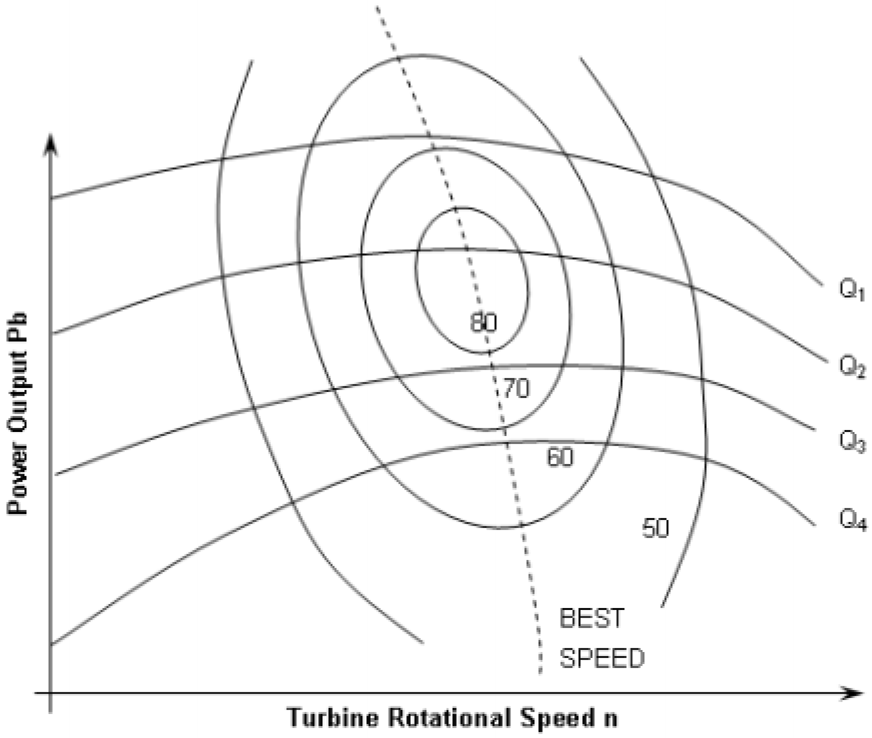

Figure A2: Typical graph showing turbine operating characteristics.

A chart of this type makes it possible to determine at what speed, and at what gate opening (volume flow rate), the turbine should be run to develop a given power output, and yet have the best possible efficiency. The best speed line is obtained by drawing a line through the major axes of the iso-efficiency curves.

Equipment Setup

Ensure the turbine is installed and set-up as described in the operation section of the manual. Load the FM6X software and select FM60 as the option. All four nozzle valves should remain open for normal use. Control of volume flow rate will be performed by the pump speed control in the software.

Procedure

Check that the Brake Force indicated in the software is Zero. IF not click the Zero button then confirm that the reading is zero. Click the ‘Pump On’ button on the software. Choose a setting of 100% for normal operation.

If desired, the built in controller can be used to automatically vary the pump speed to maintain a constant pressure (this can be useful when comparing results from the three different turbines). Allow the turbine to reach a steady speed, and check that the flow measurement reading is stable. Use the IFD History window to view the sensor readings if necessary.

Choose a suitable increment for the speed, to give 10 to 15 readings. Click ‘GO’ to record a sample. Increase the brake setting to reduce the turbine speed by your chosen increment, allow the readings to stabilize and click ‘GO’ to record a sample.

Repeat until the turbine is stalled.

Results

Go to the graph display in the software. The default plot shows torque and brake

power against speed. If necessary, rescale the graphs to obtain optimum results.

Display the graph of overall efficiency against speed.

A tabular display is also available, and results can be saved in spreadsheet format.

Exercise B - Comparison of Nozzle and Throttling Control

Objective

To show the difference in performance between throttle control and nozzle control of turbine speed.

Theoretical Background

Figure B1 shows the form taken by the curve relating hydraulic efficiency and the ratio of rotor bucket to jet speed.

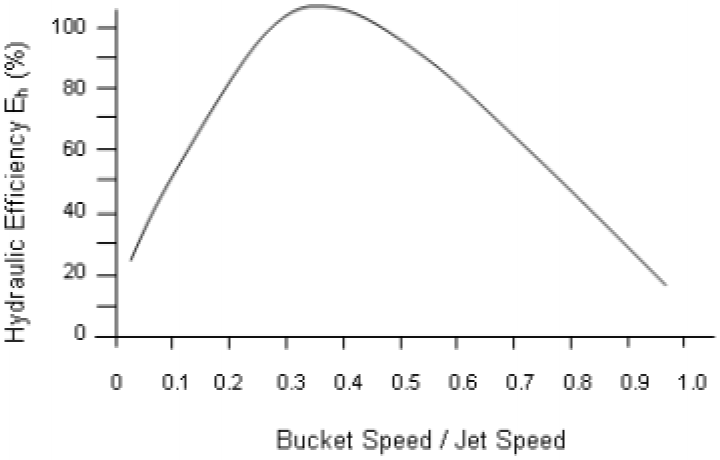

Figure B1: Hydraulic efficiency versus bucket/jet speed ratio.

The graph shows how the curve rises to a relatively sharp peak, and hence for a high hydraulic efficiency it is essential for the ratio of bucket to jet speed to remain close to the theoretical value of one half (the velocity of the jet being twice that of the bucket). The rotational speed (and hence the bucket speed) of the rotor is required to remain constant in a generating installation in order to produce power at the correct frequency. It then follows that for the hydraulic efficiency to remain high, the jet speed must also remain the same. This is so even when the power demand falls off and the volume flow rate passing through the turbine is therefore reduced (or vice-versa). With a standard throttle valve, the area of the outlet jet remains the same as the flow rate changes. This causes a change in the jet velocity (Q/A). With the Impulse turbine there are four jets. Power production is lowered by turning off one or more of the jets. The resulting slight rise in pressure can be removed by a throttle valve, meaning the remaining jets are still ejecting water at the same velocity, but a lower flow is passing through the turbine.

The following graphs demonstrate the different characteristics obtained:

Armfield Instruction Manual

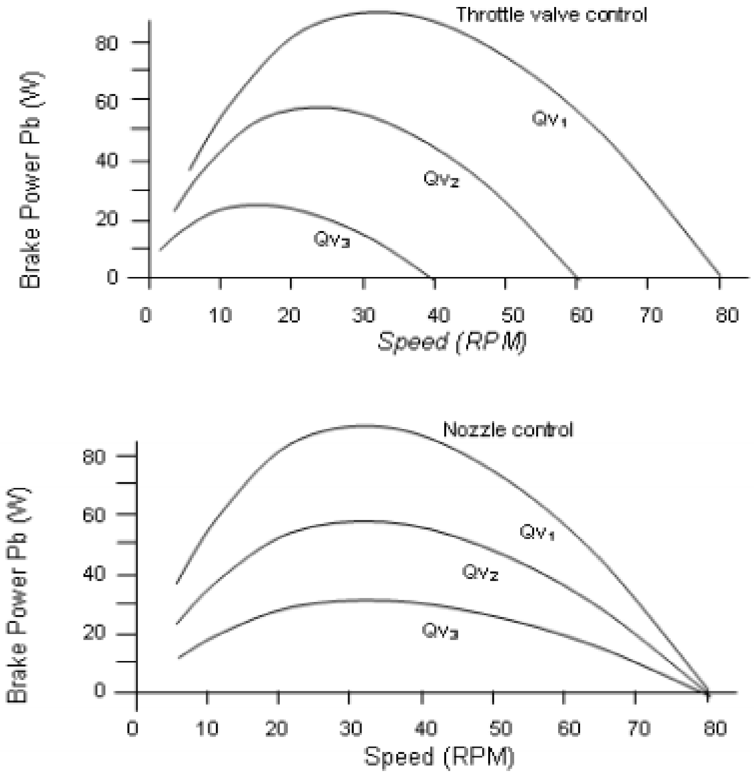

Figure B2: Typical brake power - speed curves for throttle and nozzle control.

Equipment Setup

Ensure the turbine is installed and set-up as described in the operation section of the manual. Load the FM6X software and select FM60 as the option. Begin the experiment with all four nozzle valves open. Control of inlet pressure will be performed by the pump speed control in the software.

Procedure

- Check that the Brake Force indicated in the software is Zero. IF not click the Zero button then confirm that the reading is zero. Click the pump on button on the software. Click the ‘Control’ button on the diagram screen, choose a set point of, for example, 240kPa, and click ‘Apply’. Switch the mode to Automatic. The software will now adjust the pump speed to maintain a constant pressure. Allow the turbine to reach a steady speed and check that the flow measurement reading is stable. Use the IFD History window to view the sensor readings if necessary.
- Choose a suitable increment for the speed, to give 10 to 15 readings. Click ‘GO’ to record a sample. Increase the brake setting to reduce the turbine speed by your chosen increment, allow the readings to stabilise and click ‘GO’ to record a sample. Repeat until the turbine is stalled.
- Reduce the brake setting back to zero. Add a new results table (click Sample – Next Results).
- Close one of the nozzle control valves. Allow the flow rate and pressure to stabilise before taking a set of results.
- Repeat the test with two and three valves closed. Save the results when finished. Open all four control valves.
- In order to simulate throttling of the inflow, different pressures can be used. Open the controller window, enter the new set point (e.g. 230kPa) and click OK. If desired, it is possible to choose pressures to match the flows recorded in the first half of the experiment.
- Take a new set of results for three different pressures (use a new table for each one).

Results

Plot graphs to show the results as per the examples above.

6.To Obtain the Characteristic curves for Reaction turbine operating at a range of fluid flow rates.

Pelton Turbine Experiment

Principle

Turbines convert fluid energy into rotational mechanical energy.

Introduction

There are two types of turbines, reaction and the impulse, the difference being the manner of head conversion. In the reaction turbine, the fluid fills the blade passages, and the head change or pressure drop occurs within the runner. An impulse turbine first converts the water head through a nozzle into a high-velocity jet, which then strikes the buckets at one position as they pass by. The runner passages are not fully filled, and the jet flow past the buckets is essentially at constant pressure. Impulse turbines are ideally suited for high head and relatively low power. The Pelton turbine used in this experiment is an impulse turbine.

The Pelton turbine consists of three basic components as shown in Figure 1: a stationary inlet nozzle, a runner and a casing. The runner consists of multiple buckets mounted on arotating wheel. The jet strikes the buckets and imparts momentum. The buckets are shaped in a manner to divide the flow in half and turn its relative velocity vector nearly 180°.

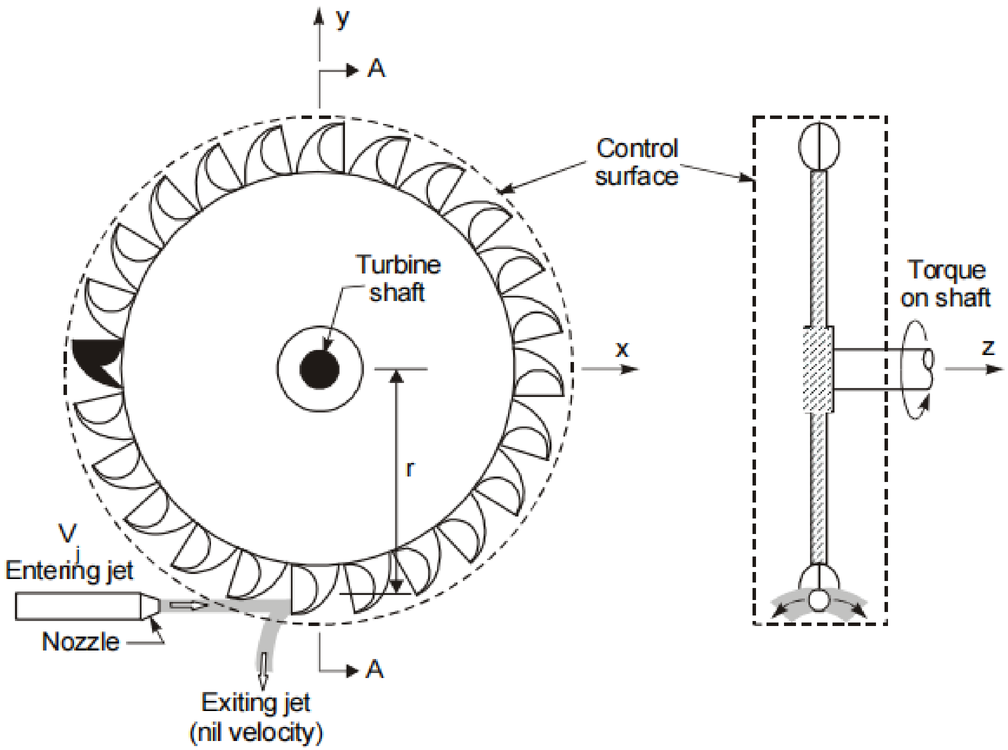

Figure 1. Schematic of an impulse turbine

The primary feature of the impulse turbine is the power production as the jet is deflected by the moving buckets. Assuming that the speed of the exiting jet is zero (all of the kinetic energy of the jet is expended in driving the buckets), negligible head loss at the nozzle and at the impact with the buckets (assuming that the entire available head is converted into jet velocity),

The energy equation applied to the control volume shown in Figure 1 provides the power extracted from the available head by the turbine

$$Pavailable = QHavailable \quad (1)$$

where Q is the discharge of the incoming jet, and $Havailable$ is the available pressure head on the nozzle.

By applying the angular momentum equation (assuming negligible angular momentum for the exiting jet) to the same control volume about the axis of the turbine shaft the absolute

value of the power developed by the turbine can be written as

$$P = \omega T = 2\pi NT \quad (2)$$

where ω is the angular velocity of the runner, T is the torque acting on the turbine shaft, and N is

the rotational speed of the runner.

The efficiency of the turbine is defined as the ratio between the power developed by the turbine to the available water power

$$\eta = P/\ Pavailable \quad (3)$$

In general the efficiency of the turbine is provided as isoefficiency curves. They show the interrelationship among Q, ω, and η. A typical isoefficiency plot is provided in Figure 2.

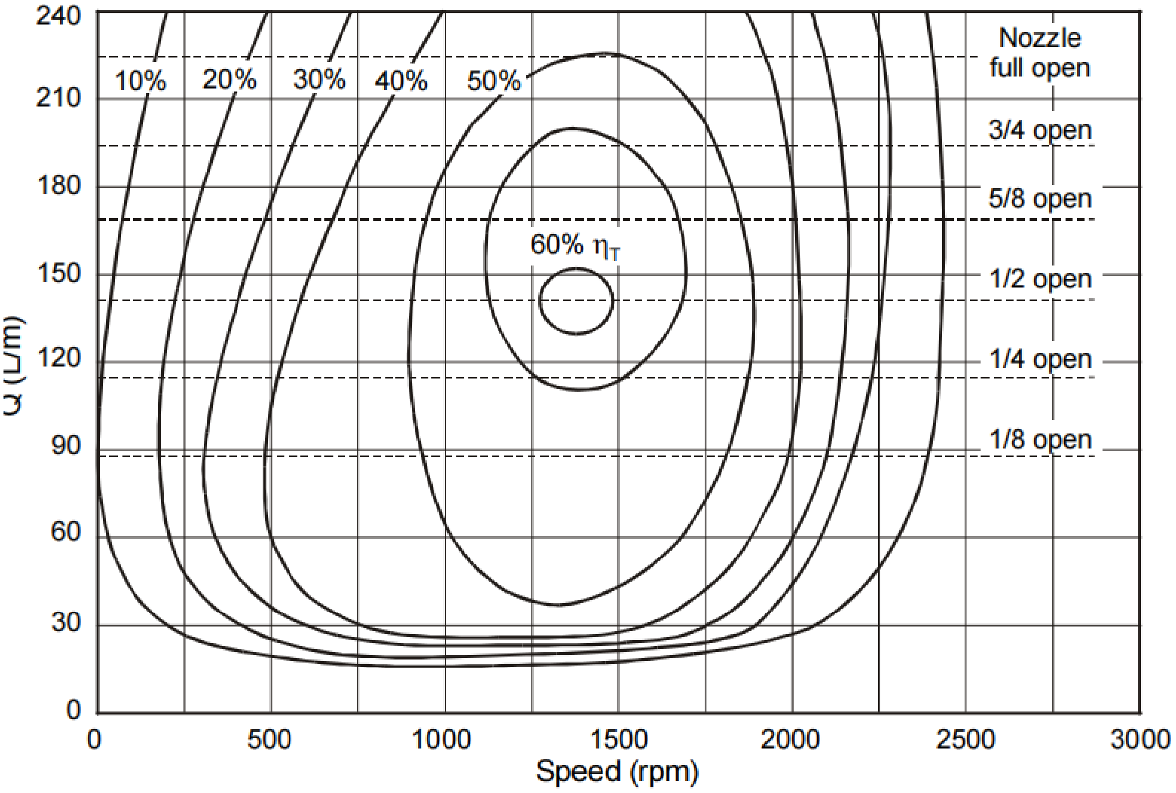

Figure 2. Isoefficiency curve for a laboratory-scale Pelton turbine

Under ideal conditions the maximum power generated is about 85%, but experimental data shows that Peloton turbine are somewhat less efficient (approximately 80%) due to windage, mechanical friction, backs plashing, and nonuniform bucket flow. The purpose of the present experiment is to determine the efficiency of a laboratory-scale Pelton turbine.

Apparatus

The Pelton turbine model is located in the Fluids Laboratory. A schematic of the experimental

setup is shown in Figure 3.

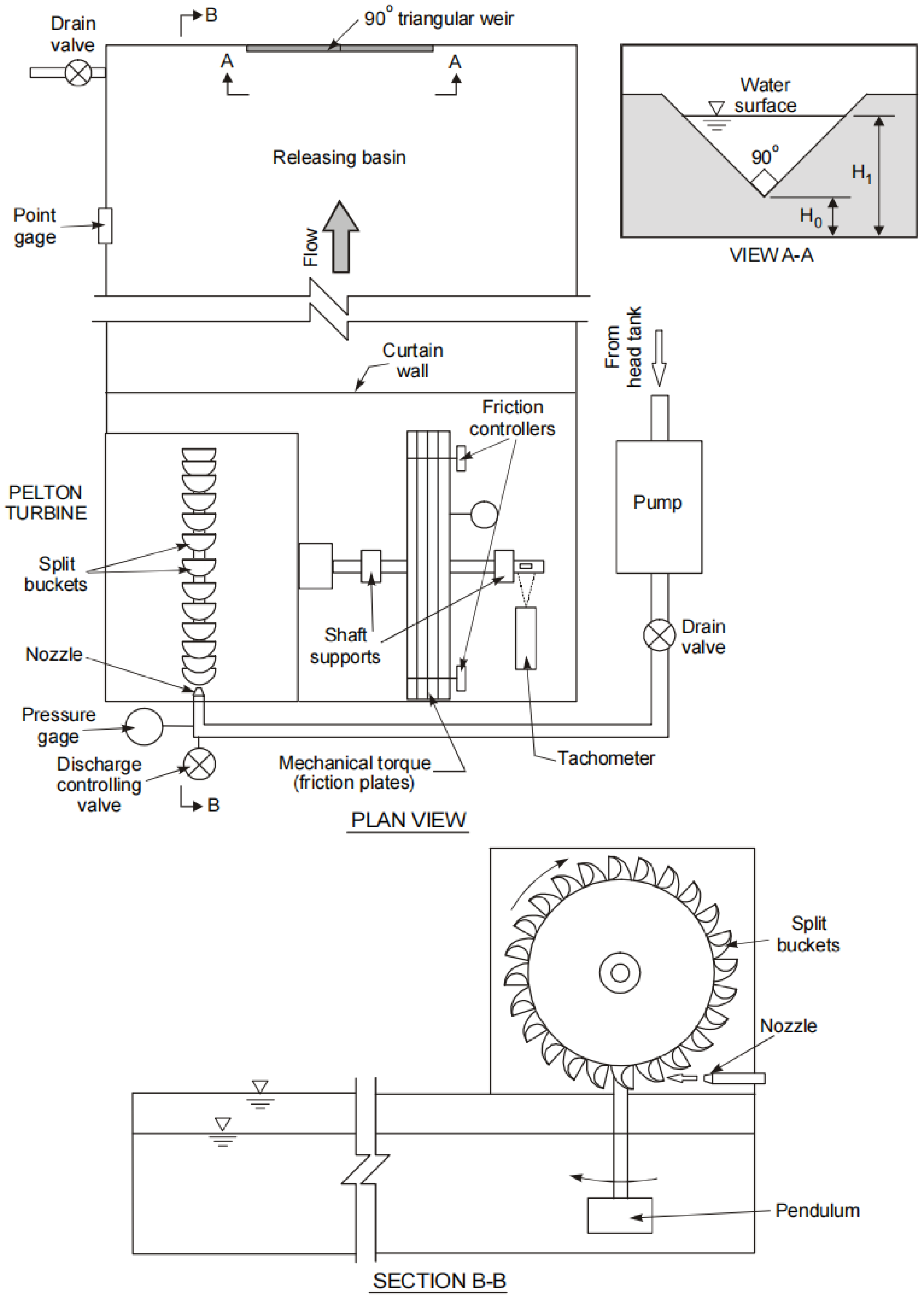

Figure 3. Layout of the experimental setup

A head tank located in the upper floors of the IIHR building maintains constant water head on the turbine. A pressure gage is attached to the water pipe entering the turbine for reading the available water head. The discharge to the setup is supplied by a pump and regulated by a discharge controlling valve. The water exiting the nozzle is collected in a releasing basin equipped with a triangular weir at the downstream end to allow measurement of the flow discharge.

Energy is extracted from the turbine using an assembly comprising friction plates centered on the turbine shaft and a pendulum attached to them. Pendulum deflection is converted in torque applied to the shaft by a mechanical system. A gage located on the mechanical brake indicates the torque applied on the turbine shaft. Water is drawn from the pipe to the turbine for cooling the friction plates. A pair of hand-wheels is used to control the friction applied on the mechanical torque. The rotational shaft speed (rpm) is determined with a photo tachometer.

Procedures

Measurements will be taken to determine the efficiency-rotational curve for two discharges. Each group of students will proceed with the sequence described below.

1. Close the two drain valves positioned on the releasing basin.
2. Open the discharge controlling valve on the inlet pipe and record the pressure on the pressure gage.
3. Loosen the torque brake so that there is no friction applied on the turbine shaft. Adjust the torque gage display to zero reading. For this setting the tachometer should reed a rotational speed of about 1800 rpm.
4. After the water level in the basin has become steady, measure the head on the weir ($H1$ in Figure 3) using the point gage located on the basin.
5. Measure the rotational speed of the shaft with no torque resistance on the shaft (runaway condition) with the provided tachometer. Carefully align the tachometer reading line perpendicular to the phosphorescent tape on the shaft.
6. Tighten slightly the friction hand-wheels and record the torque displayed on the friction gage as well as the rotational speed of the shaft with the tachometer.

Note: As the hand-wheels are tightened, the mechanical torque is very sensitive to changes, in particular, for positions close to the fully stopped shaft. For these positions the torque gauge reading will oscillate by as much as 1.5 ft-lb. The best data are obtained by using gradually smaller increments on the torque as the fricition applied to the torque are increased. Take the readings when the measured torque shows its maximum.

Repeat this step until approximately 10 different settings are obtained with the last setting with the turbine stopped.

7. After the shaft is fully stopped, completely loosen the torque brake and zero the friction gage.
8. Increase discharge by opening the pipe inlet valve to a runaway speed of 2000 rpm and repeat steps 2 through 7.
9. Open drain valves and allow the basin to drain until only a trickle of water flows over the weir. Wait for weir flow to stop, then measure the water depth indicated by the point gage (H_0 in Figure 3).

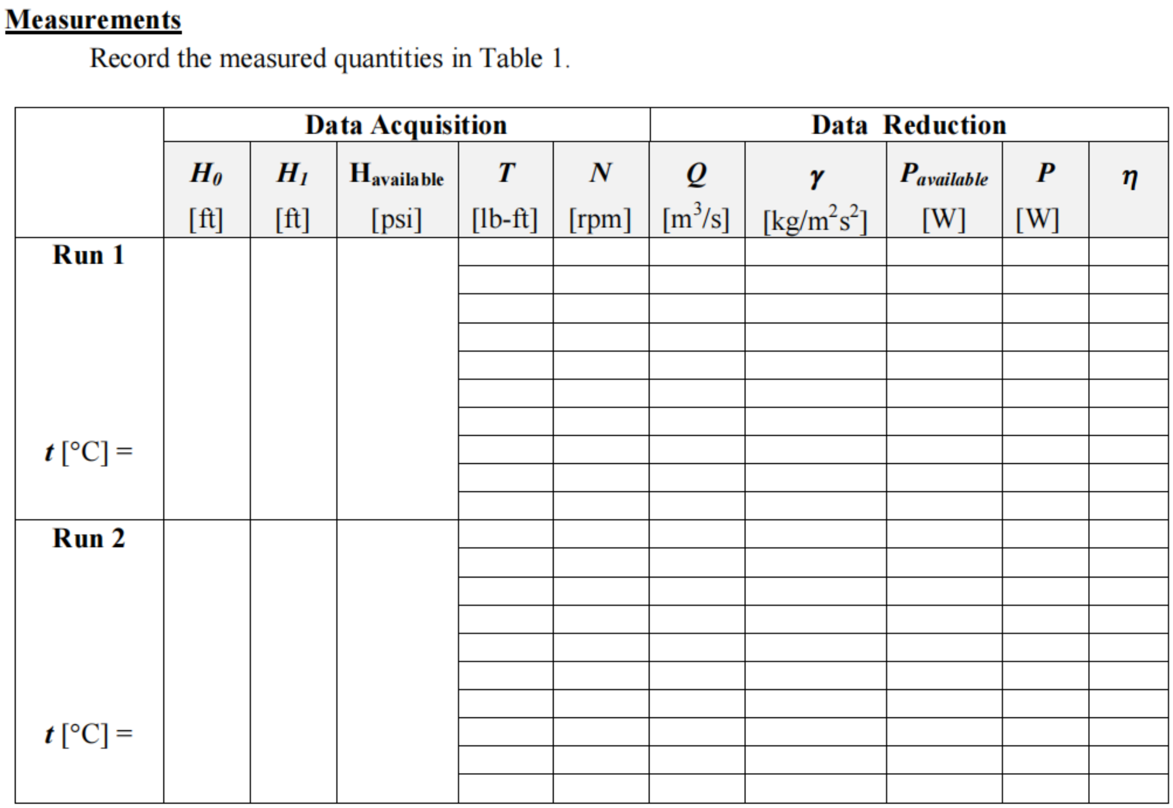

Measurements

Record the measured quantities in Table 1.

	Data Acquisition					Data Reduction				
	H_0	H_1	$H_{available}$	T	N	Q	γ	$P_{available}$	P	η
	[ft]	[ft]	[psi]	[lb-ft]	[rpm]	[m^3/s]	[kg/m^2s^2]	[W]	[W]	
Run 1 t [°C] =										
Run 2 t [°C] =										

Data Analysis

1. Determine the discharge through the system using the weir calibration equation $Q = .49(H1-H0)$ 2.48 (cfs)
2. Determine the efficiency of the turbine using the data reduction equation
3. Plot the rotational speed N vs. the efficiency η of the turbine for each of the applied torque. Plot *Pavailable* on the same graph. Show the results for the both runs.
4. Compare the curves determined experimentally with those provided in the literature.

Further Considerations

1. At what speed does the efficiency peak (compare this value with data shown in Figure
2. . Why does the efficiency vanish at zero rpm and again at runaway?
3. What could be done to the apparatus to increase the efficiency of the turbine?

4. Determine the value of the torque on the shaft by applying the angular momentum equation to the control volume specified in Figure 1.

References

Robertson, J.A. and Crowe, C.T. (1993). *Engineering Fluid Mechanics*, 5th edition, Houghton Mifflin, Boston, MA.

White, F.M. (1994). *Fluid Mechanics*, 3rd edition, McGraw-Hill, Inc., New York, NY.

7.To Obtain the Characteristic curves for Francis Turbine

General Overview

Fluid mechanics has developed as an analytical discipline from the application of the classical laws of statics, dynamics and thermodynamics, to situations in which fluids can be treated as continuous media. The particular laws involved are those of the conservation of mass, energy and momentum and, in each application, these laws may be simplified in an attempt to describe quantitatively the behaviour of the fluid.

The Hydraulics Bench service module, F1-10, provides the necessary facilities to support a comprehensive range of hydraulic models each of which is designed to demonstrate a particular aspect of hydraulic theory.

The F1-32 Francis Turbine provides a simple low cost introduction to the Francis inward flow reaction turbine showing its construction, operation and performance. The load on the turbine can be varied and the torque measured using a simple Prony type band brake. The angle of the inlet guide vanes is adjustable to vary the flow through the turbine. A full description of the apparatus is given later in this manual.

The F1-32 Francis turbine is designed to complement the F1-25 Pelton turbine.

Operation of the F1-32 requires connection to a Hydraulics Bench Service unit F1-10.

F1-32 Francis Turbine

2

Equipment Diagrams

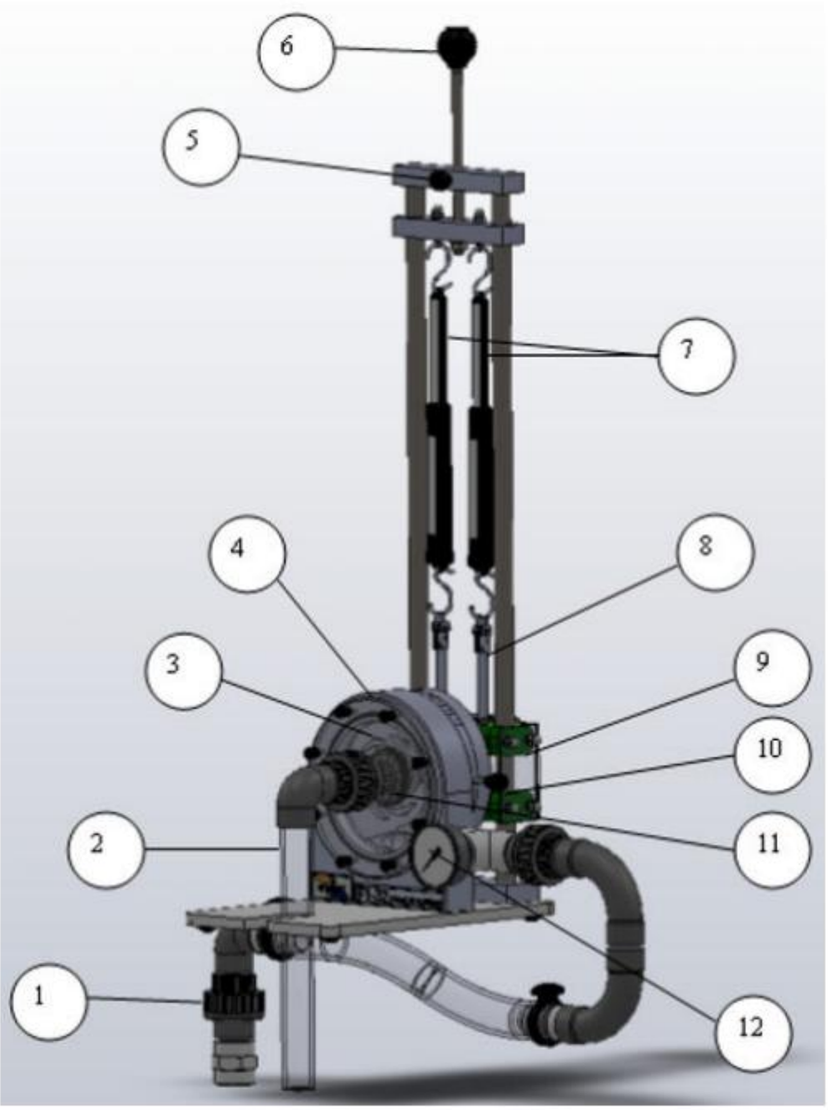

Figure 1: Front View of F1-32 Francis Turbine

Description

Where necessary, refer to the drawings in the Equipment Diagrams section.

Overview

F1-32 Showing the runner and guide vanes behind the outlet to the draft tube

The Francis Turbine is an inward flow reaction turbine and consists of a tapering, spiral shaped volute (4) that conveys water to the runner (11) via a ring of profiled guide vanes (3). The guide vanes are all linked to a common lever (10) that allows the angle of opening to be varied allowing the flow of water through the turbine to be varied. A scale around the circumference of the volute indicates the degree of movement of the lever linked to the guide vanes. Thumb nuts at the rear of the volute allow the friction on the adjuster to be varied or to clamp the adjuster in a fixed position.

Water enters the runner (11) at the periphery; it flows radially inwards through the blades of the runner towards the hub then exits axially into a transparent draft tube (2) that conducts the water into the moulded channel on the Hydraulics Bench. The force resulting from the change in direction as the water flows through the blades creates a torque that rotates the runner.

Mechanical power generated by the turbine is absorbed by a Prony type friction brake consisting of a pair of spring balances (7) attached to a brake belt (8) that is wrapped around a pulley wheel driven by the runner. The load on the turbine is varied by tensioning both spring balances which increases the friction on the pulley wheel. Brake force is determined from the difference in the readings on the two spring balances and the torque calculated from the product of this force and the pulley radius. The tension on the brake belt is varied by raising or lowering the tensioning knob (6) at the top. The position of the tensioner can be retained by tightening the clamping screw (5).

The head of water entering the turbine is indicated on a Bourdon gauge (12).

The speed of rotation can be measured using a non-contacting optical tachometer (not supplied). A hole in the clear acrylic guard allows the sensing head of the tachometer to be located adjacent to the reflective strip on the pulley wheel allowing the rotational speed to be measured.

The volute (4) of the Francis turbine incorporates a transparent front cover for clear visualisation of the runner (11) and guide vanes (3).

The F1-32 Francis turbine is connected to the water outlet on F1-10 via a flexible tube terminated in a union (1). The mating half of the union is screwed onto the outlet on F1-10 after removing the yellow quick release connector fitted to the F1-10.

Note: To minimise friction in the turbine the sealing arrangement on the drive shaft will allow water to flow through the body of the turbine to the rear of the volute. Water flowing into the channel of the F1-10 from the rear of the turbine is therefore normal when the turbine is operating. When the turbine is operating some drips of water may also be present where the drive shaft to the pulley wheel exits the volute.

Equipment Specifications

Overall Dimensions

Height - 750mm

Width - 340mm excluding connections

Depth - 340mm

Specifications

Speed range: 0 to approximately 3800 RPM (under no load at maximum inlet head)

Diameter of Francis runner: 60mm

Number of blades on runner: 12

Number of guide vanes: 6, adjustable from fully open to fully closed

Range of spring balances: 0 to 50 N x 1 N

Range of Bourdon gauge: 0 to 2 bar

Requires Hydraulics Bench Service unit F1-10.

The following dimension from the equipment is used in the appropriate calculations. If required this value can be checked as part of the experimental procedure and replaced with your own measurements:

Radius of brake drum r = 0.030m

Laboratory Teaching Exercises

Index to Exercises

Exercise A - Characteristics of a Francis Turbine

Nomenclature

Name	Unit	Symbol	Type	Definition
Radius of Brake Drum	m	r	Constant	Radius of drum on which brake band operates (r = 0.030m)
Tachometer Reading	RPM	n	Measured	Rotor speed measured in RPM. Convert to Hertz for calculations (divide reading by 60)
Guide vane angle	Degree	Gv	Measured	Rotation of guide vane lever
Rotor Speed	Hz	n	Calculated	Rotational speed converted to Hz
Spring Balance 1	N	F_1	Measured	Force reading from spring balance 1
Spring Balance 2	N	F_2	Measured	Force reading from spring balance 2
Brake Force	N	F_b	Calculated	Difference between readings on two spring balances i.e. $F_b = (w_2 - w_1)$
Volume Collected	L	V	Measured	Volume of water collected in a known time period (t). **Note:** Convert to cubic metres for calculations (divide litres by 1000)
Time to Collect	s	t	Measured	Time taken to collect a known volume of water (V)
Volume Flow Rate	m^3/s	Q_v	Calculated	$Q_v = \frac{V}{t} = \frac{\text{Volume Collected (L)}}{1000 \text{ Time to Collect (s)}}$
Inlet Pressure	Bar	p_i	Measured	Pressure at inlet measured by Bourdon gauge
Inlet Head	mH_2O	H_i	Calculated	$H_i = 10.197\, p_i$
Hydraulic Power	Watts	P_h	Calculated	Available power from the fluid (kinetic + potential energy) $P_h = \rho g H_i Q_v$

Torque	Nm	T	Calculated	$T = F_b r$
Brake Power	Watts	P_b	Calculated	Power absorbed by the brake $P_b = 2\pi nT$
Overall Turbine Efficiency	%	E_t	Calculated	$E_t = \frac{P_b}{P_h} \text{ x } 100\% = \frac{2\pi nT}{\rho g H_i Q_V} \text{ x } 100\%$

Characteristics of a Francis Turbine

To demonstrate the operation of a Francis Turbine and to determine its typical operating characteristics.

Method

Using a Prony style brake dynamometer to vary the speed of the turbine rotor from maximum speed (zero torque) to minimum speed (rotor stalled / maximum torque) in stages. Measuring the torque produced by the turbine rotor at each stage.
Demonstrating the function of the inlet guide vanes on a Francis Turbine to vary the flow through the turbine and consequently the power produced.
From the measurements obtained to plot graphs of Torque, Brake power and Overall Efficiency against rotor speed to show the operating characteristics of the Francis Turbine

Equipment Required

- F1-32 Francis Turbine
- F1-10 Hydraulics Bench
- Stop clock (not supplied)

Non-contacting type tachometer to measure the rotor speed (not supplied).

Theory

The Francis Turbine is the most popular example of an inward flow reaction machine.

A tapering, spiral shaped volute conveys water to the runner via a ring of guide vanes that are adjustable in angle to vary the flow through the turbine. Water enters the runner tangentially at the periphery, flows radially inwards through the blades towards the hub then exits axially via a draft tube.

Power generated by the turbine is absorbed by a Prony friction brake consisting of a pair of spring balances attached to a brake belt that is wrapped around a pulley wheel driven by the runner. The load on the turbine is varied by tensioning both spring balances which increases the friction on the pulley wheel. Brake force is determined from the difference in the readings on the two spring balances and the torque calculated from the product of this force and the pulley radius.

The head of water entering the turbine is indicated on a Bourdon gauge and the speed of rotation is measured using a non-contacting tachometer (if available).

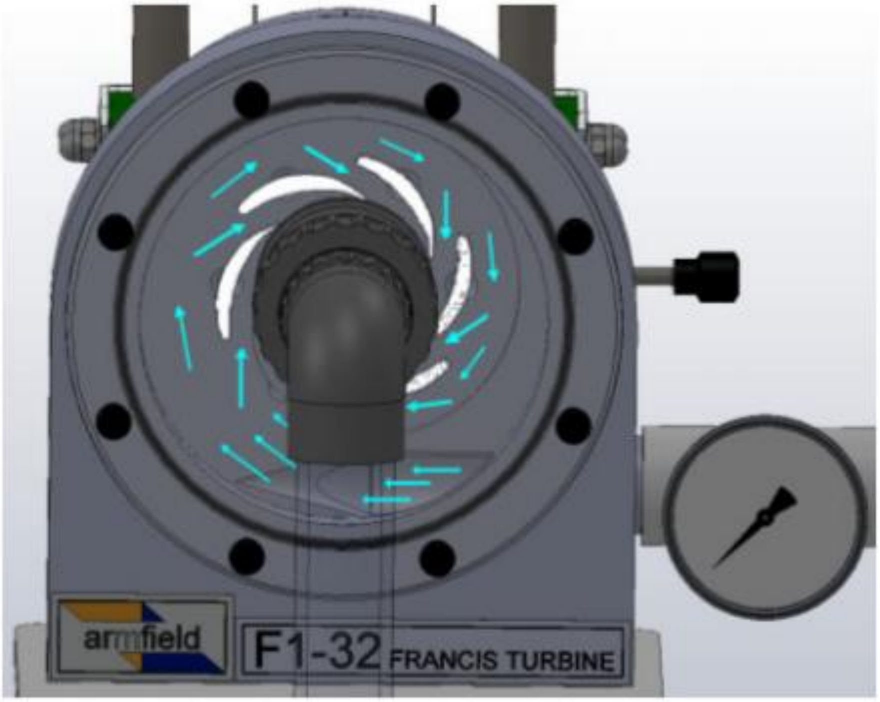

Water flowing around and through the guide vanes into the runner of the Francis Turbine

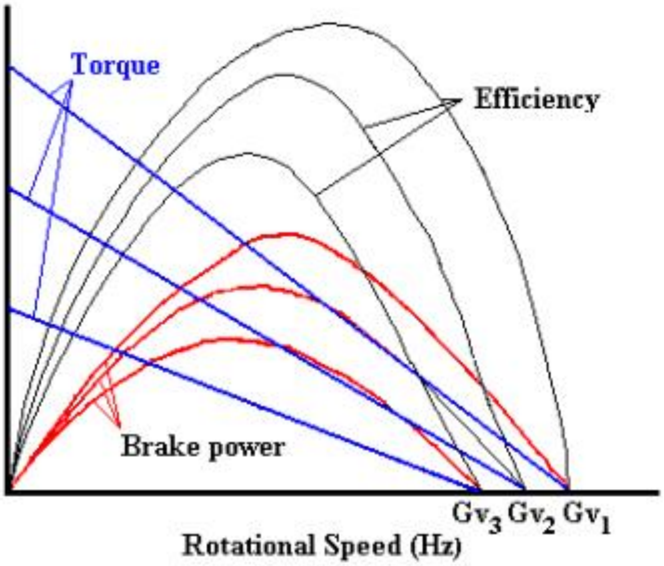

Typical characteristics of a Francis Turbine at different guide vane settings

The operating characteristics of the turbine are shown by plotting the Torque T, the BrakePowerP_b, and the Overall Turbine Efficiency E_t against the turbine rotational speed n for a series of Guide Vane settings Gv, as shown in the diagram above. It is important to note that the Brake Power and the Overall Efficiency of the turbine rise to a maximum and then fall back to zero, whilst the Torque changes constantly and linearly with speed.

Because turbines are normally used at fixed speed, e.g. when generating electricity, a turbine must be carefully designed to ensure that the maximum efficiency coincides with the normal operating speed. As the load on the turbine changes, the flow of water is regulated via the guide vanes to maintain the turbine at the required operating speed. Note that the peak efficiency changes slightly with load / flow rate so the turbine can only be optimized at one condition. If a turbine is optimized for operation at full load then the efficiency will fall slightly as the load reduces (while maintaining a constant speed).

The basic parameters that define the turbine performance are:

- ✓ Volume flow rate (Q_v)
- ✓ Inlet Head (H_i)
- ✓ Hydraulic Power (P_h)
- ✓ Torque (T)
- ✓ Brake Power (Output Power) (P_b)
- ✓ Overall Turbine Efficiency (E_t)

Each of these is considered in turn:

The flow rate of fluid through the turbine is the volume passing through the system per unit time.

$$Q_v = V/t\ [m*_3/s]\ \ldots..\ (1)$$

The term 'Head' refers to the elevation of a free surface of water above or below a reference datum. In the case of a Francis Turbine we are interested in the head of the water entering the Guide vanes, which of course has a direct effect on the characteristics of the unit. In this apparatus the head of water is generated by the pump on the hydraulics bench rather than an elevated reservoir.

The Bourdon pressure gauge measures the inlet pressure, p_i , in relation to atmospheric pressure. As the runner and the outlet of the turbine are at atmospheric pressure, it can be assumed that the reading given by the gauge is the pressure difference across the turbine. For the purpose of calculating the performance of the turbine the measured pressure is converted to an equivalent head of water, H_i , as follows:

$H_i = 10.197\ p_i\ [mH*_2O]$ where p_i is measured in Bar ….. (2)

The hydraulic power supplied by the water, P_h, can be calculated as

$P_h = \rho g H_i Q_v$ [Watts] ….. (3)

The mechanical power, P_b, produced by the turbine in creating a torque T on the brake at rotor speed n is given by

$P_b = 2\pi nT$ [Watts] ….. (4)

The torque itself is given by the equation:

$T = F_b * r$ [Nm] ….. (5)

where r is the radius of the brake pulley and F_b is the Brake force where $F_b = (F_2\text{-}F_1)$ and F_2 and F_1 are the readings on the two spring balances The Overall Efficiency of the turbine is determined from several separate efficiencies as follows:

Fluid friction 'losses' in the turbine itself, require a hydraulic efficiency E_h that is defined as:

$$E_h = \frac{\text{Power absorbed by the rotor } (P_r)}{\text{Fluid power supplied } (P_h)} \times 100\%$$

Mechanical losses in the bearings etc. require a mechanical efficiency E_m that is defined as :

$$E_m = \frac{\text{Power supplied by the rotor } (P_m)}{\text{Power absorbed by the rotor } (P_r)} \times 100\%$$

The Armfield F1-32 Francis Turbine does not include direct measurement of mechanical power output P_m, but instead measures brake force that is applied to the rotor via the Prony style band brake. A further efficiency is therefore required, expressing the friction losses in the brake assembly E_b that is defined as:

$$E_b = \frac{\text{Power absorbed by the brake } (P_b)}{\text{Power supplied by the rotor } (P_m)} \times 100\%$$

The Overall Efficiency of the Francis Turbine is the product of these individual

efficiencies $E_t = E_h E_m E_b$ therefore:

$$E_t = \frac{\text{Power absorbed by the brake } (P_b)}{\text{Fluid power supplied } (P_h)} \times 100\%$$

$$E_t = \frac{2\pi n T}{\rho g H_i Q_v} \times 100\% \quad \text{…. (6)}$$

The following dimension from the equipment is used in the appropriate calculations. If required this value may be checked as part of the experimental procedure and replaced with your own measurements.

Radius of brake drum r = 0.030m

Equipment Set Up

Ensure that the turbine is located over the moulded channel on top of the F1-10 Hydraulics Bench with the clear panel facing the operator and the draft tube pointing downwards into the moulded channel. The inlet of the turbine should be connected to the outlet in the bed of the channel. Refer to the installation section of the F1-32 Instruction Manual if installation of the turbine needs to be carried out.

Ensure that a stop clock is available to determine the flowrate and a non-contacting (optical) tachometer is available to measure the rotational speed of the turbine. Release the tension on the band brake by unscrewing the clamp and lowering the knob above the spring balances. The pulley connected to the runner inside the Francis Turbine should be able to rotate freely. Adjust the collar on each spring balance to give a reading of 0 Newton with the weight of the brake belt but no additional force applied. Check that the guide vane lever will change the guide vane angle smoothly but stay in position with light pressure. The friction can be adjusted using the two thumb nuts at the rear of the volute. These thumb nuts can be tightened if it is required to lock the guide vanes in a fixed position.

Procedure

- A typical table of measured and calculated variables is included at the end of this experiment.

Note: Because of the head \ flow characteristic associated with the centrifugal pump fitted to the F1-10 Hydraulics Bench it will be necessary to adjust the flow control valve on F1-10 after each adjustment on the turbine to obtain the characteristics of the turbine at constant inlet head. Before taking readings it is suggested that the minimum operating head is determined as described in the following procedure.

- Open the guide vanes fully, to 40 degrees on the scale, by moving the guide vane lever fully clockwise but do not force the lever at the end of its travel. Release the tension on the band brake.
- Close the flow control on the F1-10 Hydraulics Bench then switch on the service pump. Gradually open the flow control valve on the bench and check that the speed of the turbine increases as the valve is opened.
- Vary the guide vane angle and the brake tension in combination to determine the minimum upstream head that can be maintained on the Bourdon gauge. All that is then necessary when obtaining performance curves is to adjust the valve on the F1- 10 after each adjustment of guide vanes or brake tension to obtain this same upstream head. A measurement of the flowrate (using the volumetric tank) in combination with the rotor speed and brake force will give the performance at each setting of the turbine.

In this way the characteristic curves obtained will relate to the turbine operating at constant upstream head whatever the conditions in the turbine. With the guide vane angle set to 40 degrees and the turbine operating at no-load (no brake tension) measure and record the readings from the inlet Bordon gauge and the tachometer (the spring balances should both read zero). Then measure the volume flow rate using the volumetric tank on F1-10 with a stop clock.

- Tension the band brake slightly to load the turbine and slow the rotor slightly. Measure and record the readings on both spring balances and the tachometer then measure and record the volume flowrate using the volumetric tank on F1-10 with a stop clock.
- Continue tensioning the band brake in stages, until the rotor stalls, to give a range of readings on the spring balances. At each setting adjust the flow control valve on the F1-10 to give the constant upstream head on the Bourdon gauge (determined 21 Armfield Instruction Manual previously). At each setting record the readings on both spring balances and the tachometer then measure and record the volume flowrate using the volumetric tank on F1-10 with a stop clock.
- When a complete set of results has been obtained with the guide vanes fully open, reduce the flowrate slightly by closing the guide vanes to 20 degrees and release the brake tension. Repeat the above procedure to obtain a set of results with increasing brake tension but constant upstream head.
- Repeat the above readings with guide vane settings of 10 degrees then 5 degrees. If required, a family of performance curves can be obtained by repeating the above measurements with reduced upstream head indicated on the Bourdon gauge. Note that as the upstream head is reduced the performance of the turbine will fall dramatically so results will not be as reliable as those obtained at higher head. The curves obtained will show how the performance is affected by reduction in upstream head.

Results

For each setting of the guide vanes plot graphs of Torque T, Brake (Mechanical) Power P_b, and Efficiency E_t, all against rotor speed n.

Conclusion

Comment on the shape of the graphs obtained.

At what speed is the maximum Torque obtained?

At what speed is the maximum power output obtained from the turbine?

Is the maximum efficiency at the same speed?

What happens to the power output and the maximum efficiency when the upstream head is varied?
Suggest optimum conditions for operation of a Francis Turbine.

Measured Variables							Calculated Variables							
Vane Angle G_v	Taco Reading n	Brake Force F_1	Brake Force F_2	Volume collected V	Time t	Inlet Pressure p_i	Rotor Speed n	Brake Force F_b	Torque T	Volume Flowrate Q_v	Brake Power P_b	Inlet Head H_i	Hydraulic Power P_h	Overall Efficiency E_t
Degrees	RPM	N	N	L	Secs	Bar	Hz	N	Nm	m^3/s	Nm	m	Watts	%
40														
40														
40														
40														
40														
40														
20														
20														
20														
20														
20														
20														
10														
10														
10														
10														
10														
5														
5														
5														
5														
5														

8.To Determine Rainfall- Runoff relationships (Storm hydro graphs), Generation of overland flow. Sediment yield using Advanced Environmental Hydrology System.

General Overview

This floor-standing unit is the only Hydrology System that includes features making it suitable for studying fluvial geomorphology. It combines the capabilities of the S10 Rainfall Hydrographs and S11 Ground Water Flow Unit into a single comprehensive facility. The system is fully instrumented for investigation of rainfall/run-off hydrographs, ground water abstraction studies and unique to this apparatus, fluvial mechanics.

This apparatus sets out to demonstrate, on a small scale, some of the physical processes found in hydrology. These processes fall into two related categories: the relationship between rainfall and run-off from catchment areas of varying permeability and the abstraction of ground water by wells, both with and without surface recharge from rainfall.

Thus it can be seen that it is concerned with that part of the hydrological cycle bounded by the arrival of "net rainfall" on the ground surface and catchment run-off either by surface streams or well abstraction.

The hydrological cycle describes the complete movement of water between the atmosphere, the land surfaces and the water masses of the earth. There are a number of possible routes that water can follow in moving round this cycle and these are outlined below.

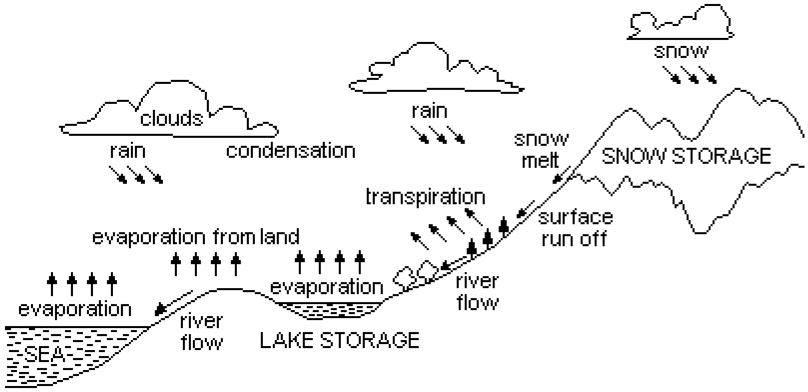

Precipitation (rainfall) on the land surfaces is disposed of in various ways. What water remains after the ground has been wetted and evaporation and transpiration losses have been deducted, is termed the "net rainfall" and this may

i. soak into the ground (infiltrate) to join the ground water held in voids (normally very small)
ii. fill up surface depressions to form puddles, or

iii. any remaining will flow over the ground surface in the downhill direction to form streams and, subsequently, rivers.

Ground water also flows laterally under the influence of slopes, to reappear at the surface either to form springs or to increase stream flow by reverse infiltration through the bed.

Abstraction from wells is another way in which water can leave a catchment area and it can, therefore, be thought of as forming part of the run-off.

A proper understanding of these processes and their inter-relationships is essential for many purposes. Engineers are commonly concerned with the provision of water supplies for urban and irrigation needs; with the estimation of flood magnitudes and frequencies; with the consequences of land drainage works on flood risks, on the use of wells to DE-water construction excavations and the drainage of lakes and polders. Geologists and geographers are frequently faced with problems which involve hydrological processes such as drawing up a water balance for a catchment area, the investigation of morphological processes in rivers and streams, and the control of mud flows and soil erosion caused by surface and sub-surface water flows.

The range of experimental capabilities is significantly increased by the provision of a river inlet tank and outlet collecting tank. These enable a range of fluvial mechanics experiments to be carried out in related topics such as river flow and sediment transport, initiation and characteristics of bed-load motion, general and local scour in open channel flow etc.

Equipment Diagrams

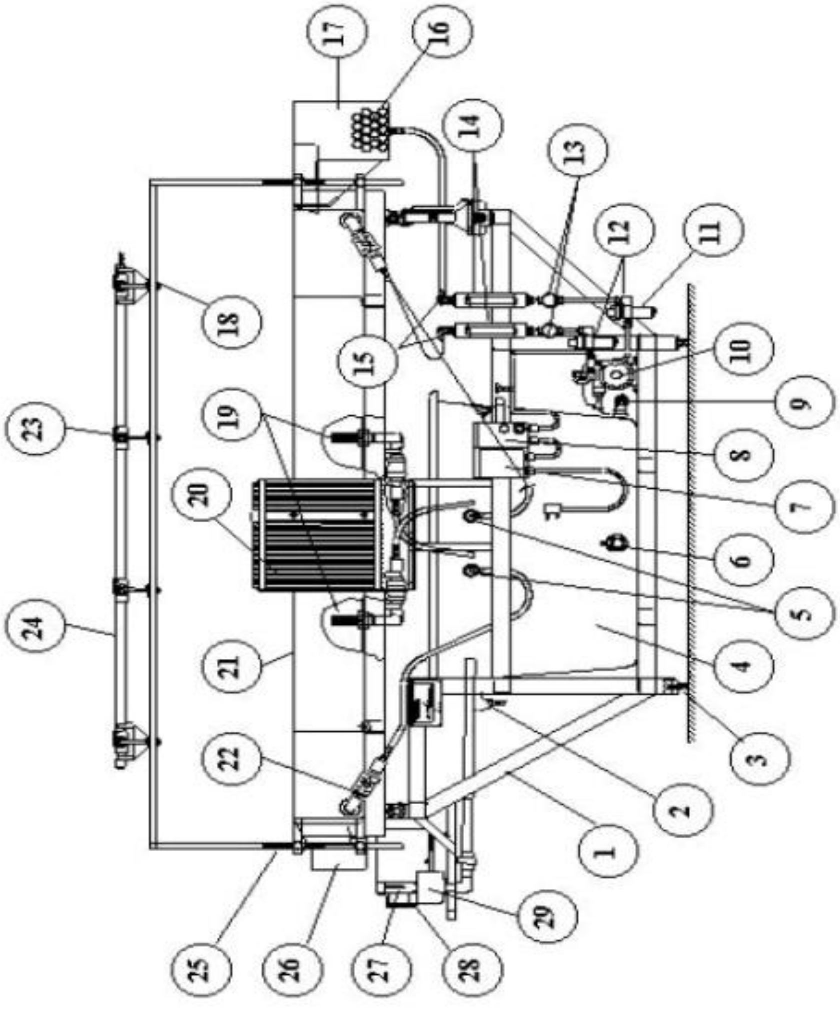

Figure 1: Front View of S12-MKII Hydrology System


Rajiv Gandhi University of Knowledge Technologies
IIIT Basar

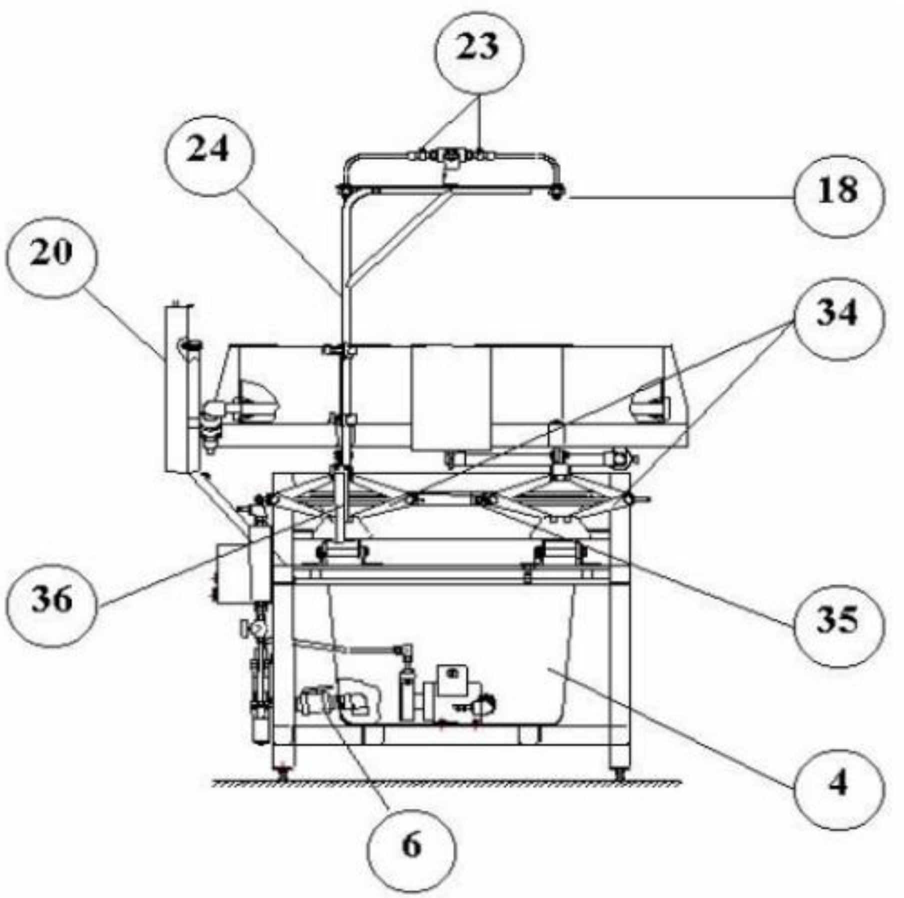

Figure 3: End View of S12-MKII Hydrology System

Description

Where necessary, refer to the drawings in the Equipment Diagrams section.

Overview

The equipment consists of a sand tank (21) that is mounted on a support frame (1) with the necessary services, features and instrumentation to facilitate studies of ground water flow, ground water abstraction, flood hydrographs and fluvial mechanics.

Frame

The frame incorporates an adjustable foot (3) on each leg to allow the equipment to be leveled. It is suggested that the top edge of the sand tank (21) be used as the datum when leveling the equipment.

The frame incorporates a pair of scissor type jacks (34) at one end that allow the sand tank to be elevated. The jacks are linked so that the sand tank remains stable when raising or lowering. An indicator (36) shows the gradient of the sand tank. The jacking handle is simply inserted into the coupling (35) on the front jack and rotated clockwise to raise the sand tank or anticlockwise to lower the sand tank. The jacking handle should be removed after adjusting the elevation of the sand tank.

CAUTION: Although the sand tank cannot move suddenly when adjusting the elevation, extreme care should be taken when operating the jacks to prevent crushing of fingers, hands or other objects between the upper and lower frames.

Water Feeds

A sump tank (4) and centrifugal pump (10) mounted in the frame, beneath the sand tank, provide the water for the various demonstrations. Water exiting the sand tank from the various outlets returns to the sump tank under gravity for reuse. An overflow pipe (2) on the side of the side of the sump tank ensures that the tank cannot be overfilled. A drain valve (6) is connected to a tapping at the base of the sump tank.

The centrifugal pump draws water from the sump tank via a tapping (9) at the base of the tank. Water from the pump passes through two parallel feed arrangements, each incorporating a filter (12), pressure regulator (11), feed flow control valve (13) and variable area flowmeter (14). The pressure regulator in each feed ensures that the flow is not affected by changes in the other feed provided that the regulator is adjusted to suit. The outlet from each feed is terminated with a self-sealing quick release connector (15) that allows water to be fed to either end of the sand tank, the spray nozzles or the river inlet tank as required via the appropriate flexible connection. The self-sealing quick-release connectors allow rapid changes to the configuration without the need for tools.

The outlet from the centrifugal pump incorporates a pressure relief valve to limit the system pressure to a maximum of approximately 3.0 bag and prevent the pump from overheating if the flow from the two outlets is restricted or stopped. Water discharging from the relief valve is returned to the sump tank via a connection in the side wall of the tank. When demand from the two outlets is high, the relief valve will remain closed to maintain the pressure in the system. When demand is reduced and the system pressure rises above 3.0 barg, the valve will open to relieve the excess flow. The relief pressure is adjustable and set prior to delivery but instructions are included in the Routine Maintenance section of this manual should further adjustment be necessary.

10 Description

The electrical control box is mounted on the frame below the sand tank and incorporates a starter (7) for the pump and an RCD (8) to protect the operator against electrical shock.

Sand Tank

The shallow sand tank (21) is fabricated from stainless steel for corrosion resistance and should be filled with sand (not supplied by Armfield) or other granular material as appropriate to the studies (refer to page 15 for details on choosing a suitable granular material). An array of tapping points (37) in the sand tank floor is connected to a multi-tube manometer (20) that enables the water table surface (phreatic surface) to be determined. The level in each tube can be read by sliding the common scale along the track at the top of the manometer. Before using the manometer to measure water levels it is important to expel air from the flexible tubes connecting the manometer tubes to the tapping points. (Refer to the Commissioning section). Each tapping (37) in the sand tank floor incorporates a filter mesh to retain the sand while allowing the water to flow. Two cylindrical wells (19) are also included in the sand tank floor. The wells are covered with stainless steel mesh to prevent the loss of sand. Valves and pipework beneath the sand tank allow the water draining from each well to return to the sump tank. In-line feed flow control valves (32) allow the flow to be varied. Flexible outlet hoses (33) allow the water to be diverted to a collecting vessel (not supplied) for the purpose of measuring the volumetric flowrate. The two wells are purposely designed to be short in length so that they can be left in position without affecting the surface flow experiments. The plug of sand directly above each well can be removed if required for abstraction experiments but the affect on the results will be negligible if the sand is left in place.

The reference number/spacing of the tappings (37) and the position of the wells (19) is shown below:

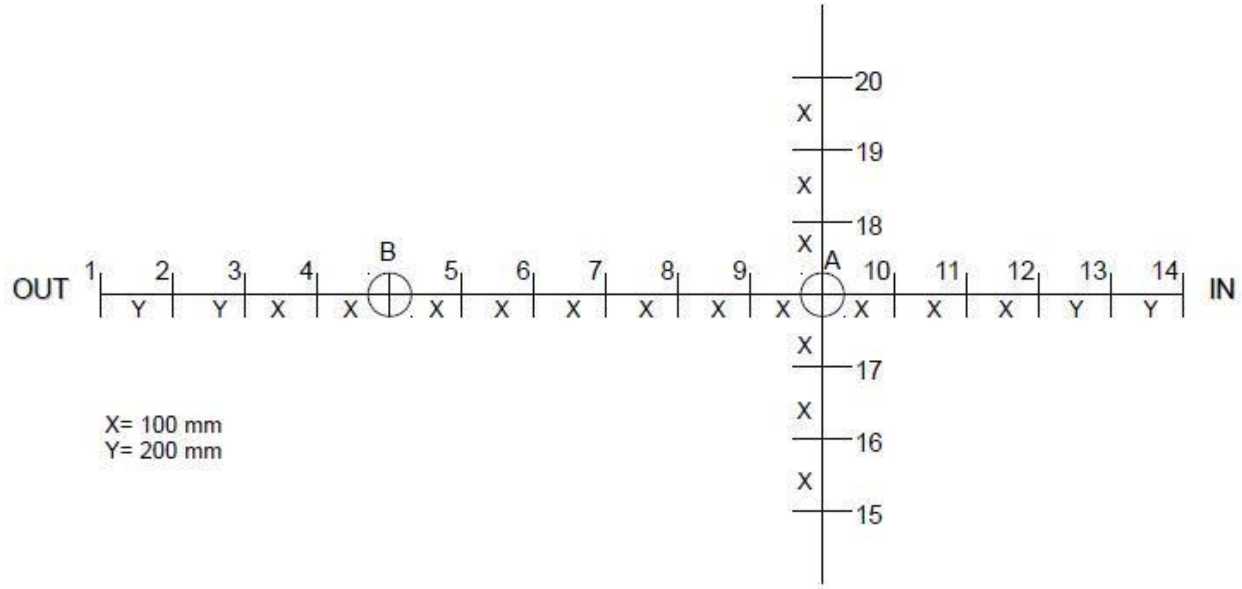

Location of tappings and wells in the sand tank

A perforated pipe (22), in the form of a French drain, is buried in the sand at each end of the sand tank. These allow water to be drained from the sand tank or admitted to the sand tank as required. Each French drain is connected through the side wall of the sand tank to a flexible tube terminated with a self-sealing quick-release connector. When it is required to drain water from the sand tank the flexible tube is connected to one of the quick-release connectors (5) on the side of the sump tank, allowing the water to return to the sump tank. The flow of water can be varied using the in-line valves (32). When it is required to admit water to the sand tank the flexible tube is connected to one of the water feeds via the quick-release connector (15).

A deep cut-out (31) at the left-hand end of the sand tank allows water (and transported sediment) to leave the sand tank. This cut-out incorporates side slots that locate stop-logs (rectangular strips of plastic) that create a rectangular weir. Adding or subtracting stop-logs of different sizes can vary the height of the weir. A weir chute/diffuser (26), fabricated from clear acrylic, is bolted to the end wall of the sand tank adjacent to the cut-out. The weir chute/diffuser allows the water and sand exiting the sand tank to fall into the outlet collecting tank (28) with minimal disturbance to the surface of the water or any collected sediment in the outlet collecting tank (described below). A clear polythene skirt with slits is attached to the bottom of the weir chute/diffuser, using a rubber band, to minimize splashing as the water and sand fall into the collecting tank.

Outlet Collecting Tank

Water and sediment exiting the sand tank via the weir chute/diffuser is deposited into the outlet collecting tank (28) that is designed to measure the flow of water and collect any sediment washed from the sand tank.

This tank is fabricated from clear

acrylic and incorporates the following features:

The water and sediment fall into the open area of the tank. A vertical mesh screen (30), supported by perforated plates on either side, ensures that sediment is retained in the tank. The water flows through the mesh, along a stilling channel then over a narrow rectangular notch (31) before discharging into a funnel (29) that returns the water to the sump tank for re-use. The flowrate of the water is determined from the height of the water upstream of the notch using an inclined manometer that incorporates a scale calibrated directly in litres/min. The manometer is mounted directly on the side of the outlet collecting tank.

Sediment falling into the tank is deposited in the bottom of the tank. The sand can be removed by lifting the tank clear from its support. If it is required to collect the sand for quantitative measurements then a piece of fine cloth or a small strainer can be positioned beneath the weir chute/diffuser to collect the sediment. If this is changed at regular intervals then the rate of accumulation of the sediment can be determined.

When version S12-MKII-50 has been supplied, additional instrumentation and a USB interface is included that can be used to measure both the water flow and the accumulation of sediment continuously using a PC.

S12-MKII-50 (S12-MKII Including Data Logging and Educational Software)

Note: This option can only be supplied at the time of ordering the equipment and cannot be fitted to en existing S12-MKII.

This system works by measuring the height of the water and the combined weight of the sand and water collected in the outlet tank (28). The water flow rate is calculated from the height over the outlet weir (27) and the sediment flow rate is calculated from the rate of change of the weight. The system comes with educational software incorporating help texts, graph plotting, etc. and requires a user provided PC with an available USB port. Refer to the sections Installing the Software and Operating the Software for further information. Alternatively, refer to the Help text in the software.

The electronics associated with the load cell and pressure sensor are installed in an enclosure that is mounted underneath the support for the Outlet Collecting Tank. The load cell is located underneath the Outlet Collecting Tank and the pressure sensor is connected to a tapping adjacent to the inclined manometer on the side of the Outlet Collecting Tank. The tube from the pressure sensor can be disconnected from the side of the collecting tank when it is required to remove the tank for emptying / cleaning. After refilling the tank with water to the base of the weir it will be necessary to re-prime the connection to the pressure sensor to eliminate any air bubbles.

Overhead Spray Nozzles

Rainfall onto the catchment area is provided by two rows of four spray nozzles (18) above the tank, mounted on a support frame (24). The height of the spray nozzles above the sand tank can be varied to optimise the demonstration by adjusting the height of the support frame. This is achieved by withdrawing the spring-loaded plunger (25) at each end, raising or lowering the support frame to the required height, then re-locating the spring loaded plunger in the appropriate hole.

One person at each end of the equipment should hold the support frame while performing the
adjustment.
An isolating valve (19) upstream of each nozzle allows the pattern to be changed as required. Since the flowrate through each nozzle is dependent on the pressure, if the appropriate pressure regulator (12) is adjusted to give the required flowrate then the flow through each nozzle will remain constant when other nozzles are turned on or off. To achieve this the feed flow control valve (13) should be opened fully and the pressure regulator adjusted to give the required flow through the nozzles.
The flexible tube from the arrangement of spray nozzles is connected to one of the water feeds, when required, using the self-sealing quick release connector (15). The height of the nozzles should be adjusted at the required flowrate to give adequate coverage over the surface of the sand without excessive spray over the sides of the sand tank as described above.

River Inlet Tank

A river inlet tank (17) mounted at the right-hand end of the sand tank allows a stream of water to flow onto the surface of the sand, simulating the flow from a river upstream. The river inlet tank is fabricated from stainless steel and is bolted to the end wall of the sand tank adjacent to the shallow cut-out. Water enters at the base of the tank, flows upwards through a bed of glass marbles (16) to minimise any turbulence then flows sideways onto the surface of the sand through a rectangular section.

An anti-erosion mat (small section of mesh) is supplied to reduce any local scour where the water enters the sand tank. This mat is buried just beneath the surface of the sand adjacent to the outlet of the river inlet tank.

The flexible tube from the base of the sand tank is connected to one of the water feeds, when required, using the self-sealing quick release connector (15).

Laboratory Teaching Exercises

Index to Exercises

CAUTION: Although the sand tank cannot move suddenly when adjusting the elevation, extreme care should be taken when operating the jacks to prevent crushing of fingers, hands or other objects between the upper and lower frames.

General Equations and Constants

Equations

Discharge (m^3/s) = Discharge (l/min) x (50/3)

Average channel depth (or width) (m) = Sum of depths (or widths) (m) ÷ number of depth (or width) measurements taken

Rainfall Intensity (mm/hr) = ((Rainfall Flow Rate (l/min) x (50/3 ÷ Catchment Area (m^2)) x (5/18)

Sediment Transport Rate (kg/ms) = (Sediment Yield (kg) ÷ Time taken (s)) ÷ Average width (m)

or

Sediment Transport Rate (kg/s) = Sediment yield (kg) ÷ Time taken (s)

Valley Slope (%) = Reading from scale on end of simulator

Darcy's Equation = $$Q = 2\pi rh \frac{dh}{dr}$$

Thiem's Equation = $$s_1 - s_2 = \frac{Q_o}{2\pi kH} \log_n \frac{r2}{r1}$$

Constants

Specific weight of sand = 2650 M/m^3

Specific weight of water = 9810 N/m^3, but alters with water temperature

g (gravitational acceleration) = 9.81 m/s^2

Kinematic Viscosity (m^2/s) = 0.00000114, but varies with temperature

Median Grain Diameter of Sediment Bed = Determine from sand used

Other Equations

Channel cross-sectional area (m^2) = Average channel width (m) x Average channel depth (m)

Wetted perimeter (m) = bed width (m) + 2 x bank height (m)

Hydraulic radius (m) = Channel cross-sectional area (m^2) ÷ Wetted perimeter (m)

Velocity (m/s) = Discharge (m^3/s) ÷ Channel cross-sectional area (m^2)

Reynolds Number = (Velocity (m/s) x Hydraulic radius (m)) ÷ Kinematic viscosity (m^2/s)

Froude Number = Velocity (m/s) ÷ (√ (g x Average depth (m)))

Boundary Shear Stress (N/m^2) = Specific weight of water (N/m^3) x Hydraulic radius (m) x Slope (m per m)

Shear Velocity = √ (g x Hydraulic radius (m) x Slope (m per m)

Boundary Reynolds Number = (Shear velocity (m/s) x Grain diameter (m)) ÷ Kinematic viscosity (m^2/s)

Shields Parameter = Boundary shear stress (N/m^2) ÷ (Specific weight of water (N/m^3) x 1.65 x Grain diameter (m))

Total Stream Power (J/s) = Specific weight of water (N/m^3) x Discharge (m^3/s) x Slope (m/m)

Specific Stream Power (watts/m) = Total Stream Power ÷ width (m) = Velocity (m/s) x Specific weight of water (N/m^3) x Depth (m) x Slope (m per m)

Critical Stream Power (Watts/m) = 290 x Grain diameter $(m)^{1.5}$ x g x Log ((12 x Depth (m)) ÷ Grain diameter (m))

Net Stream Power (J/s) = Total stream power (J/s) – Critical stream power (J/s)

Bagnold's Bedload Equation (kg/ms) = (Net stream power (J/s) ÷ ½ $g)^{1.5}$ x (Depth (m) ÷ $0.1)^{2/3}$ x 0.1 x Grain diameter (m) ÷ $0.0011)^{-1/2}$

Channel Sinuosity = Channel length (m) ÷ Valley length (m)

Total thalweg length (m) = Sum of all channel thread lengths (m)

Braiding Intensity = Number of sub-channels per unit channel length

Total Sinuosity = Total thalweg length (m) ÷ Valley length (m)

Nickpoint Speed (cm/min) = Distance travelled by nickpoint (cm) ÷ Time taken to move distance (min)

Exercise A - Rainfall-runoff relationships (storm hydrographs)

Theory

Rain falling on a catchment area will make its way to the point of concentration where it will leave the catchment. In a gravity flow situation, this is bound to be the lowest point in the catchment. If the discharge is by means of ground water movement, the situation is more complex and the flow can be distributed over a wide front but as the flow is constrained to leave this model catchment at a single point, we shall not consider this case here.

In practice, a catchment area is defined only once the point of concentration has been fixed and, as steam flow data is needed here, the site of a new pre-existing flow measurement structure is usually chosen. When rain falls on the catchment, the time taken for the water to reach the point of concentration will depend on the horizontal distance it has to travel and also on the velocity.

Figure A1 shows lines of equal flow time for a catchment of similar proportions to the model in which the flow velocity is everywhere the same. Figure A2 illustrates a valley catchment in which the flow velocity is assumed to increase once the water has entered the stream channel. Flow outside the stream could be either by surface or ground water flow, or both.

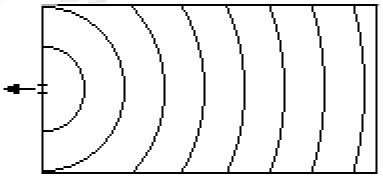

Figure A1

The greatest time taken for rain falling on the catchment (the far corners) is called time of concentration.

A graphical record of flow and time is called a hydrograph and Figure A3 shows a typical hydrograph resulting from a single rainstorm. The timing and intensity of the rainfall is shown by the block in the upper part of this figure and if the rainfall persists for longer than the time of concentration of the catchment, the run-off hydrograph will level off at the peak value on the catchment. Under these circumstances, the recession curve part of the hydrograph is delayed until the rain stops.

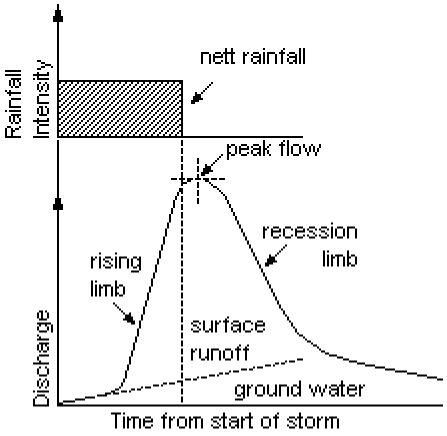

Figure A3

During the early stages of the rainstorm, so long as no recent rain has fallen, the ground will be able to absorb the water falling on it and add it to the ground water already present. When all the voids are filled, the excess must flow over the surface and enter the stream directly as surface flow. It is this surface flow first reaching the point of concentration that produces a sharp rise in the hydrograph and this hydrograph discontinuity can be used to separate the ground water contribution from the direct run-off, as indicated in Figure A3. The hydrograph shown in Figure A3 is typical for storms of duration shorter than the time of concentration of the catchment.

Procedure

Stream flow from a single storm

Before this experiment is carried out, the sand tank should be set to a slope of about 1%. Smooth the sand in the tank to give a smooth surface parallel to the top edge of the tank, then use the sand scoop to create a channel of rectangular cross section centrally down the length of the tank between the river inlet and the deep outlet at the foot. The channel should be approximately 4 cm wide by 2 cm deep.

Connect the flexible piping from the overhead spray nozzles to the quick release connector on the 3 l/min flow meter.

a. Stream Flow for a Long Duration Storm (See Figure A4)

Turn on the spray nozzles to simulate rainfall and select a rainfall flow rate of between 1 and 3 l/min. Allow rain to fall long enough to give a steady run-off value. Turn off the flow and record the recession limb of the hydrograph. Use a stopwatch started (zero time) at commencement of rainfall, and read weir discharge as frequently as necessary to show the hydrograph form.

The experiment may be repeated for different rainfall flow rates, smaller catchment areas (by closing some of the valves to the rainfall nozzles) and for small differences in slope.

b. Stream Flow from a Short Duration Storm (See Figure A5)

(Less (60% - 80%) than time of concentration)
Proceed as in a) but cut off rain while hydrograph is still rising Figure A4 will result.

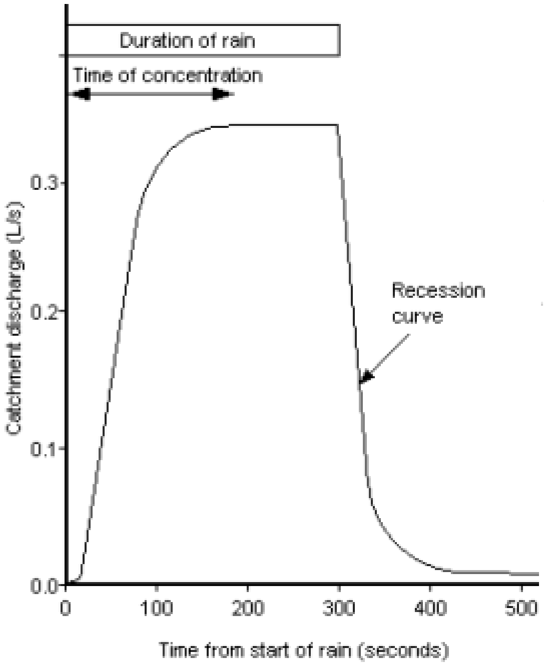

Rain duration greater than time of concentration for catchment

c. Histogram

The hydrograph should properly be shown as in Figure A4 and Figure A5 by plotting the results directly.
It may be found that the best-shaped storm hydrographs are obtained when the "rain" is stopped just before the maximum run-off is obtained. That is to say, the duration of the storm is slightly less than the *time of concentration* for the catchment. If the rain persists after the water table reaches the surface then *direct run-off* over the surface occurs. When the rain stops before this occurs, the run-off is only in the form of *ground water* flow.
It is recommended that different slopes and surface profiles be tried until the most suitable hydrograph is obtained.

Stream flow from multiple storms

Connect the flexible piping from the river inlet tank to the quick release connector on the 5 l/min flow meter. Connect the flexible piping from the overhead spray nozzles to the quick release connector on the 3 l/min flow meter.
The sand bed should be allowed to drain following any previous use of the apparatus.
This experiment can be carried out by arranging a first storm of duration rather less (say 50%) than the time of concentration, tc (as obtained in the previous experiment).

Follow it by a second storm of the same duration while the recession limb of the first

one is still quite high. The discharge values must be recorded continuously from the start of the first storm, and the resulting double hydrograph when plotted will show the much larger run-off values obtained for the second storm which falls on a previously saturated catchment. The method for drawing the hydrograph, outlined in "Stream Flow for a Single Storm", may be used.

Stream flow from an impermeable catchment (urbanisation)

After investigating the rainfall run-off relationships for a permeable catchment, it is of interest to reduce the permeability of the catchment surface by covering part or all of it with the impermeable Polythene sheet provided with the accessory items. If only the upper part of the catchment (away from the discharge end) is sealed in this way, then the run-off from the plastic sheet is lost in the sand in the lower part. If, however, the lower part of the catchment only is covered, the run-off is more immediate and the effect on the hydrograph more marked. The plastic sheet provided should be trimmed with a knife or scissors to fit the required catchment area.

Stream flow from a highly vegetated catchment

The effect of a highly vegetated catchment may be simulated by covering part or all of the catchment surface with the absorbent material provided.

Stream flow with reservoir storage

The effect of a flood detention reservoir on the run-off from a standard storm can be demonstrated by using the accessories provided. The circular ended ring can be used when partly buried in the sand to form a circular reservoir, and the closed ring can, similarly, be used to retain the rain that falls on it and to release the water slowly through the centre aperture. It may prove necessary to use all available vessels to 36 Exercise A simulate detention reservoirs and it will be found that inverted dustbin lids serve well so long as they have a small drainage hole made in their centre.

Effect of land drainage on run-off hydrograph

One of the commonly employed methods of improving land drainage is the construction or renewal of ditch systems. Different model ditch systems can be constructed on the sand surface in the catchment tank and their effects on the run-off hydrograph of a standard storm compared.

Results

Description of catchment area and initial channel planform:

Sketch of catchment area:

Time since start of run (secs)	Rainfall flow rate (l/min)	River inlet flow rate (l/min)	Flow rate over weir (l/min)

Plot graphs (run-off hydrographs) of run-off flow rate against time since start of rainfall for each set of data.

Conclusions

Discuss the results obtained in the experiments performed. Describe the shape of each hydrograph, and comment on the effects of each parameter on the run-off experienced. Suggest reasons for any deviation from the expected results.

9.Determination of efficiency of Multistage Centrifugal Pump.

Learning Objectives:

At the end of this experiment, the student will be able to:

- Know the operation of centrifugal pump.
- Draw the characteristic curves of centrifugal pump at constant speed.

Aim: To conduct performance test on a centrifugal pump at rated speed.

Model:

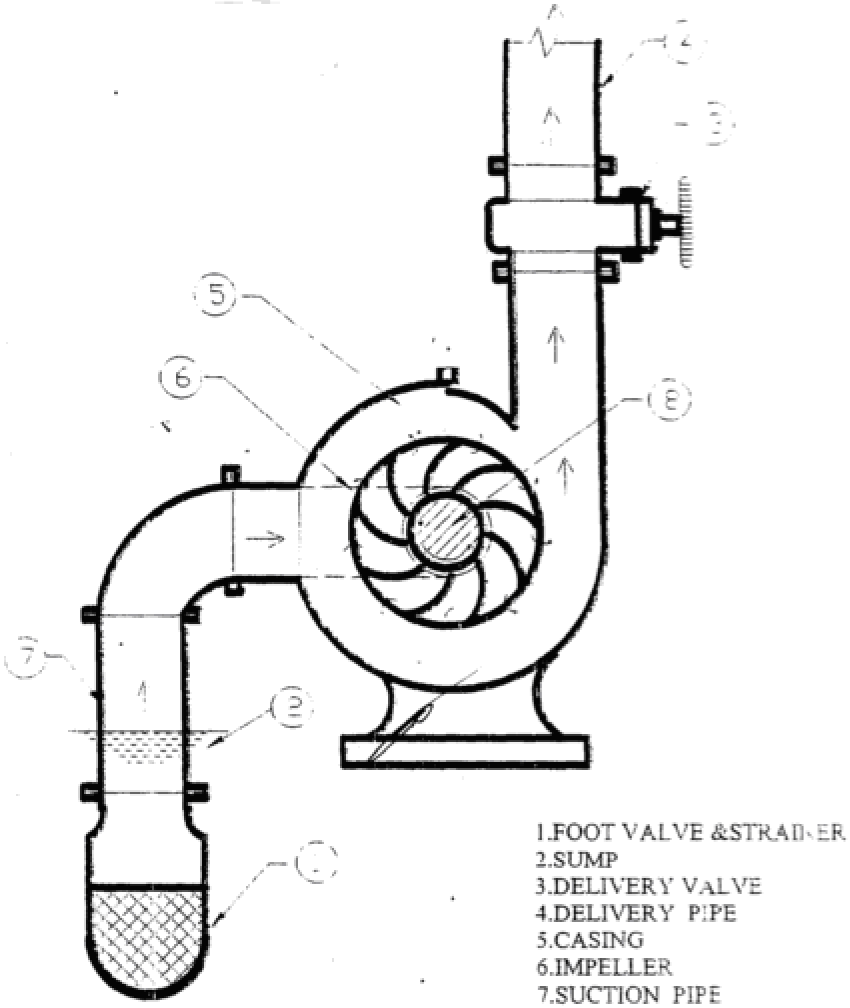

Fig. Component parts of Centrifugal Pump

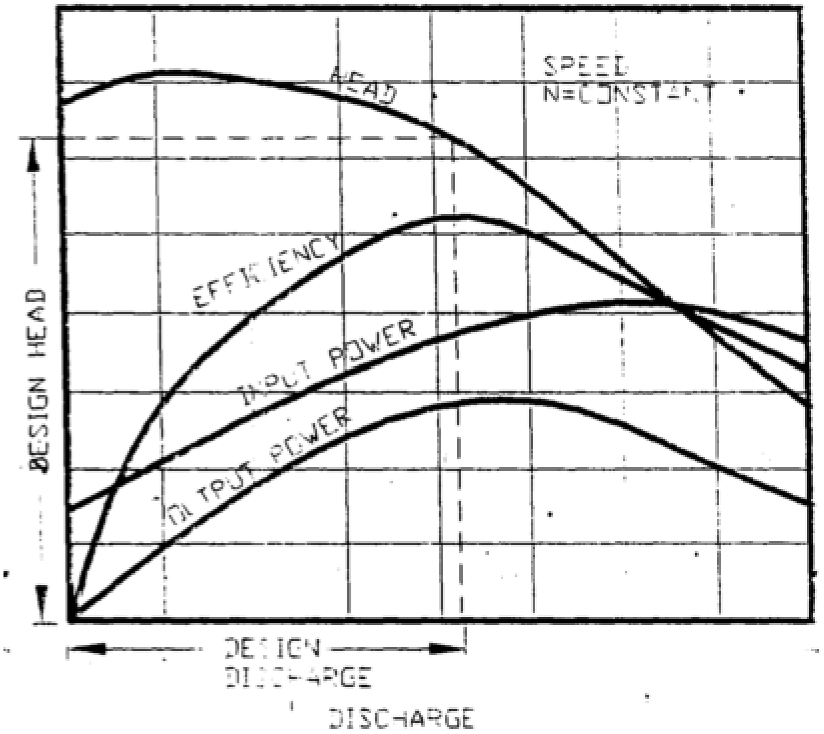

Fig.. Operating characteristic curves of a Centrifugal Pump

Tools required: Stop watch, measuring tape, Energy meter etc.

Procedure:

1. Prime the pump with water.

2. Close the gate valve.

3. Start the motor

4. Note

    (a) The pressure gauge reading (P_g)

    (b) The vacuum gauge reading (h_v)

    (c) Time taken for 10 revolutions of the energy meter in seconds

    (d) The difference of level between the pressure and vacuum gauges=43cm

5. Take at least 6 sets of readings varying the head from maximum at shut of to minimum where gate valve is fully open. This can be done by throttling the delivery valve. The suction side is 50 mm dia. and the delivery side is 50 mm dia. An energy meter is provided to measure the input into the motor and a collecting tank to measure the discharge. A pressure gauge and a vacuum gauge are fitted in the delivery and

suction sides to measure the head.

Note: The pump must be full of water while starting. For this reason it should not be allowed to drain and hence a foot valve is provided. But after the long run the leather valve in the foot valve becomes useless and so the foot valve becomes leaky. In this case the pump should be primed by pouring water in the suction side up to the impeller, before the pump is started.

Observations:

1. Size of the collecting tank = l x b x h = 0.3 m x 0.3 m x 1.0 m
2. Diameter of the suction pipe, d_s = 50 mm
3. Diameter of the delivery pipe, d_d = 50 mm
4. Energy meter constant, N = 400 rev/kwh
5. Difference in the levels of pressure and vacuum gauges, X = 430 mm.

Model Calculations:

1. Actual Discharge: (Q) $Q = AR/t \ (m^3/s)$

   Where
   A: Cross-sectional area of collecting tank = $l \times b$
   R: Rise of water column in collecting tank in meters
   t: Time taken for 'R' units rise of water column in seconds

   $Q =$ m^3/s

2. Pressure gauge reading in metres of water column (H_g)

   $H_g = [(P_g \times 10^4 \times 9.81)/ 9810]$ m

   P_g = Pressure gauge reading in kg/cm^2

   $H_g =$

2. Vacuum gauge reading in meters of water column (H_v)

   $H_v = (h_v \times 10^{-3} \times x\ 13.6)$ m of water

   H_v = Vacuum gauge reading

3. Velocity head in delivery pipe ($V_d^2 / 2g$)

   V_d : Velocity of flow in delivery pipe $= Q/(\pi/4\ d_d^2)$

   $(V_d^2 / 2g) =$

4. Velocity head in suction pipe ($V_s^2/ 2g$)

   V_s : Velocity of flow in suction pipe $= Q/(\pi/4d_s^2)$

   $(V^2_s / 2g) =$

5. Total head in the pump (H)

   H : $H_g + H_v + X$

6. Output of the pump (O/P)

   Out Put = $\gamma.Q.H$ Watts

7. Input to the pump (I/P)

$$I/P = (3600 \times n) / (N \times T)$$

n : Number of revolutions of energy meter

N : Energy meter constant rev/ kWh

T : Time for ‘n’ revolutions of energy meter in sec.

8. Overall efficiency (η_o)

$$\eta_o = Output/Input$$

Observation Table

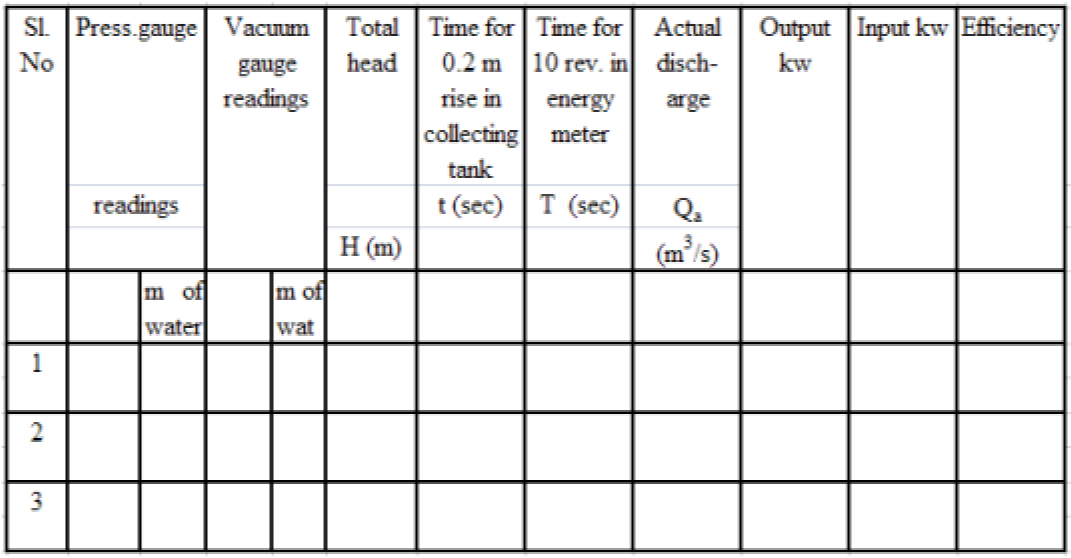

Sl. No	Press. gauge readings		Vacuum gauge readings		Total head H (m)	Time for 0.2 m rise in collecting tank t (sec)	Time for 10 rev. in energy meter T (sec)	Actual disch-arge Q_a (m^3/s)	Output kw	Input kw	Efficiency
		m of water		m of wat							
1											
2											
3											

Result:

Review Questions:

1. What is priming? What is use of foot valve?
2. What is manometric head?
3. What is the function of the casing used in centrifugal pump?
4. What is NPSH?
5. What is the minimum starting speed of a centrifugal pump?
6. What precautions are to be taken while starting and closing the centrifugal pump?
7. Under what conditions would a reaction turbine work as pump?

TILTING FLUME

General Overview

The flow channel or flume is one of the most important tools available to the hydraulics engineer or civil engineer whether engaged in teaching basic principles or researching solutions to practical problems. Many applications in fluid mechanics are associated the flow of water through an open channel where the water has a free surface that is exposed to the air at atmospheric pressure.

The range of glass sided tilting flumes described in this manual has been developed during 30 years of continuous production, and examples are installed in educational and research establishments throughout the world. The flumes are available in different lengths to suit the application, short versions for basic investigations and longer versions for investigations of gradually varied flow profiles with non-uniform channel flow.

A comprehensive range of accessories, models and measuring instruments is available including wave generating equipment. Refer to S6-MKII Ordering Options for a summary of the accessories available.

The user can, of course, construct appropriate models for the evaluation of specific problems.

The design of the flume provides sufficient accuracy for project work and research work in addition to the teaching of basic principles. Floor space requirements are reduced to a minimum. The construction using plastic sump tanks, GRP end tanks and a stainless steel channel bed minimizes the maintenance necessary. The use of toughened glass for the channel walls allows safe and clear viewing of the flow patterns associated with the model or accessory in use.

The standard flume includes manually operated jacking for varying the slope of the channel bed. Electrically operated jacking is available as an option. Another option is the provision of a closed loop for sediment transport studies.

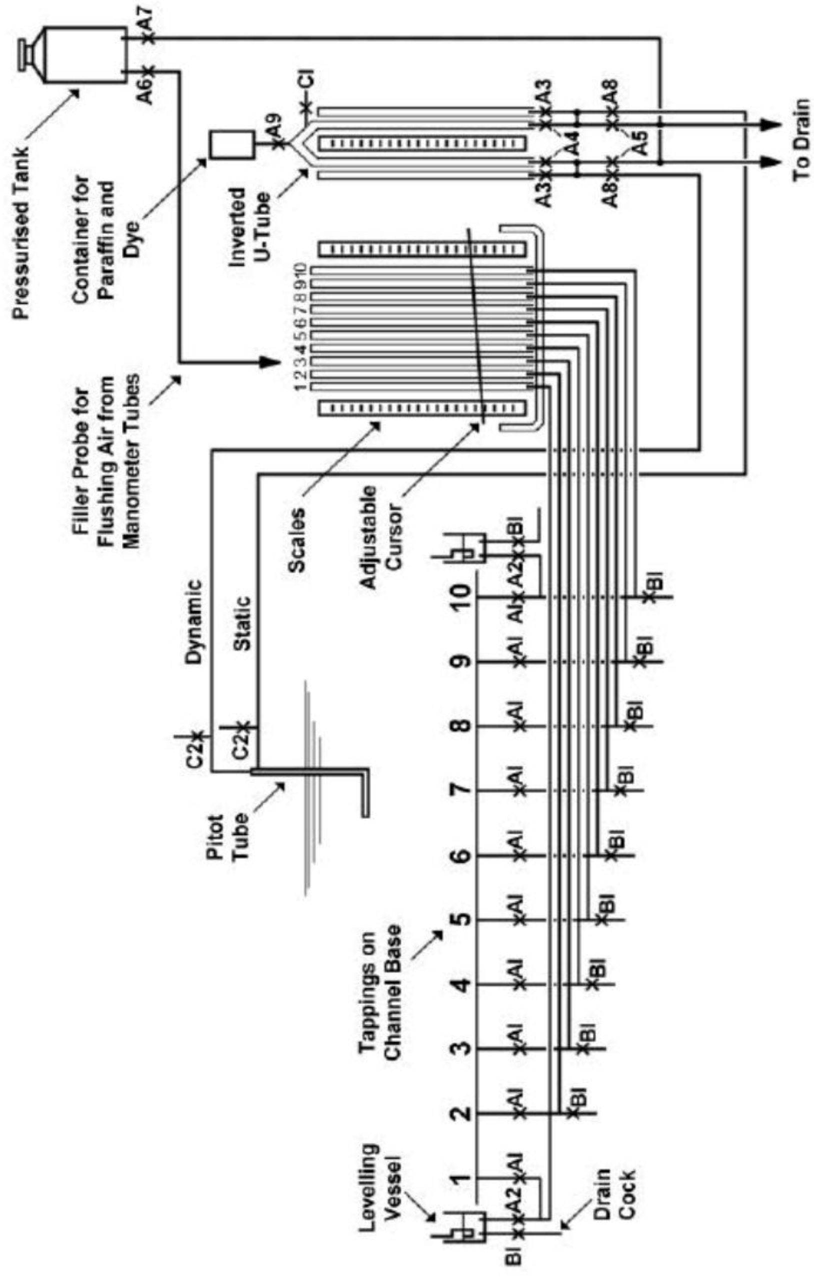

Figure 1: Optional S6-37 Flow Monitoring System used with S6-MKII Glass Sided Tilting Flume

Equipment Diagrams

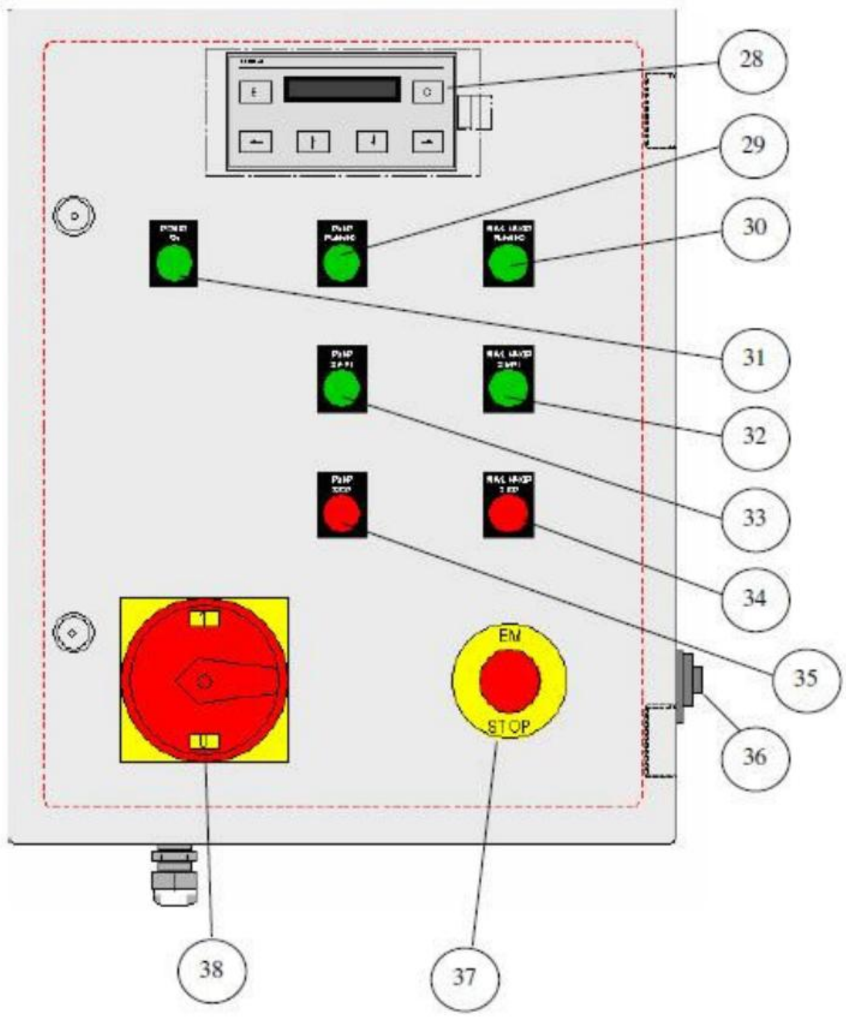

Figure 2: Electrical Console Diagram; Location of Controls (Controls for optional power jacking, wave maker accessories etc are only used when these options are fitted)

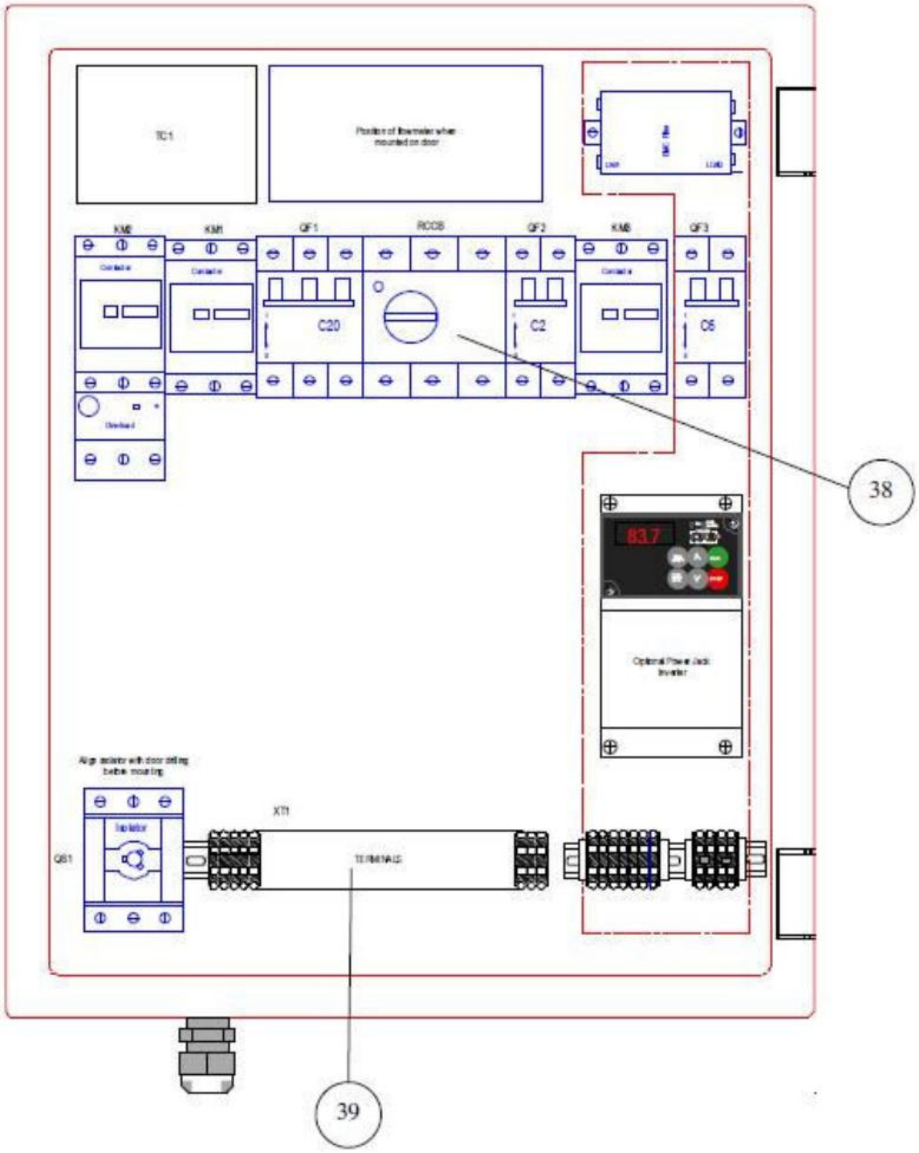

Figure 3: Electrical Console Diagram (Standard S6-MKII); Location of Components

6

Description

Where necessary, refer to the drawings in the Equipment Diagrams section.

Overview

The S6-MKII is a glass-sided tilting flume with a stainless steel bed. It has a working cross section of 300 mm wide by 450 mm deep, and is available in standard working lengths of 5m, 7.5m, 10m and 12.5m. Each flume is supplied broken down into pre glazed sections that simply bolt together for ease of assembly on-site.

All numerical references in brackets relate to the diagrams on the preceding pages. A General Arrangement Diagram is included for each of the standard working lengths that includes overall dimensions and typical floor loads at each of the supports when the working section is filled with water. See Installation Dimensions for S6-MKII Flumes for specific dimensions for positioning the supports during installation of the flume.

The standard flumes are completely self contained, and comprise: the glass-sided working section (18), moulded inlet tank (21), moulded discharge tank (13), a series of interconnected sump tanks (27), a centrifugal water pump (4), an electronic flowmeter (3), a jacking system (7 & 10). A separate freestanding electrical console is supplied that houses the digital flowmeter readout (28) and controls for the water pump (29, 33 & 35) and Wave maker (30, 32 & 34) if this option is fitted.

Each channel section is supplied fully glazed with large clear panels of toughened glass (18) on both sides. The use of glass on both sides, coupled with careful design of the cantilevered side supports (15), provides excellent visibility and allows flow visualisation over the full working height of the flume. The glass panels are sealed to the bed of the flume using a rubber ‘U’ section compressed by an aluminium alloy clamping strip (20). Adjusters (17) are provided so that the top edge of the glass may be accurately aligned.

The stainless steel channel bed (19) is manufactured to high tolerances, and is designed with an integral webbed support frame, which gives the flume a high degree of rigidity and stability. Joints between the channel sections are bolted together and located by dowels to ensure accurate alignment. The overall strength and rigidity of this design allows excellent stability figures to be achieved and eliminates the need to provide adjusting screws or to perform periodic setting up of the flume to maintain its specification.

Each 2.5 m long section of channel incorporates two mounting points (24) for models and two pressure tappings (23) that are located on the centreline, in the bed of the flume. Each model mounting point incorporates a removable plug with integral ‘O’ ring seal. The plug is inserted into the mounting point from inside the flume and is designed to be flush with the bed when the mounting point is not in use so that the flow of water is not disturbed. The pressure tappings are located at 1.25 m centres along the flume and incorporate an isolating valve and connection for flexible tubing to appropriate instrumentation such as the optional Zagni Flow Measuring System (S6-37).

Scales are attached to the glass walls upstream and downstream of one model mounting point to allow the level of the water to be measured. If an alternative measuring device, such as a hook and point gauge, is not available then the model should be installed between the scales to allow the upstream and downstream water levels to be measured.

The glass support brackets between the level scales are modified to allow them to be moved when installing long models such as the S6-32 Parshall Flume or S6-33 WSC Flume. This can also help when installing the S6-27 Roughened beds in the centre section of the flume. Removal of the fixing screw on the appropriate glass support brackets allows the brackets to be slid along the box section creating an opening long enough for insertion of the model. The brackets should be slid back into position after installing the model.

Instrument rails (16) are provided along the entire working length of the flume, and a continuous scale calibrated in mm is provided along the length of one of the rails. Adjustable screws allow the rails to be set level and true. An instrument carrier and various measuring instruments are available as options. These allow the depth of water, local velocity, wave profile etc to be monitored as required at any desired location in the flume. Refer to Optional Experimental Models and Instrumentation for further details.

Excellent velocity profiles are achieved in the working section by careful shaping of the inlet tank (21) and by the incorporation of stilling and smoothing devices. A damper board (22) floats on the surface of the water in the inlet tank to reduce ripples on the surface of the water. Water level in the working section is maintained by an overshot tilting weir that is located in the discharge tank (13). The weir consists of a paddle that is hinged at the bottom. The height of the weir is adjusted using a winch (14) that is located on top of the discharge tank. The winch incorporates a brake that allows the weir to be raised or lowered under total control using the winch handle.

The outlet in the base of the discharge tank is fitted with a flexible draft tube (12) to direct the water to the end sump tank (26) without undue splashing or noise. The inlet tank and discharge tank are both moulded from tough, non-corroding GRP. A drain valve (1) in the base of the inlet tank allows the tank to be fully drained for maintenance or when not in use.

Water circulation is by a centrifugal pump (4) mounted on the floor beneath the channel. This draws water from a series of interconnected sump tanks (27) standing on the floor and running alongside the flow channel. The sump tanks are moulded from corrosion resistant plastic. The tanks are connected together by large diameter flexible sleeves (9) so that the water can flow through the tanks for recirculation. A drain valve (6) on the end sump tank allows the water to be drained for maintenance. Each sump tank incorporates a lid (11) to keep the contents clean. The lids on the sump tanks **must not** be used as a walkway when operating the flume or performing maintenance on it. If a walkway is constructed above the sump tanks then suitable steps, handrails etc must be provided to allow safe access.

All interconnecting pipes and fittings are made of non-corroding materials.

The flow of water into the channel is regulated using a manually adjusted butterfly valve (5). The flow rate is measured using an electromagnetic flowmeter (3), and displayed on a digital readout (28) located on the front of the electrical console. The digital readout is supplied pre-configured to display the flow of water in units of litres/second. The display also indicates the percentage of the maximum flowrate available (30 litres/sec = 100 %) The digital readout can be re-configured to display different units of flowrate or total flow as required. Refer to Configuration of the Electromagnetic Flowmeter.

The electrical console is mounted on a pedestal and is usually located adjacent to the flow control valve so that the flow rate can be read whilst adjusting the valve. A master isolator switch (38) allows the electrical supply to be isolated from the equipment. A 'Power On' indicator (31) shows when the master isolator switch is in the 'On' position and the equipment is live. Also located on theconsole are the ‘Emergency Stop’ button (37), the ‘Pump Start’ button (33) and ‘Pump Stop’ button (35). A 'Pump Running' indicator (29) shows when the pump is switched on. An additional emergency stop button is provided on the longer flumes. This is located at the discharge end of the flume and allows the electrical supply to be disconnected from the pump, flowmeter and jacking system (if electric jacking is fitted) if in an emergency arises.

A ‘Wavemaker Start’ button (32), ‘Wavemaker Stop’ button (34) and ‘Wavemaker Running’ indicator (30) are included on the console. These are only appropriate if the optional Wave Generator S6-35 or Random Wavemaker S6-40 is installed. A connector (36) on the right hand side of the console allows the optional S6-MKII-50 Data Logging accessory to be connected, when available.

The standard flume is tilted using a manually operated jacking system. All versions have a common pivot pedestal (2) at the inlet end. A single jacking station (10) is used for the 5m long flume. Longer flumes have additional intermediate jacking pedestals (7) that are connected to the main jacking pedestal by a geared drive. A handwheel (25) on the main jacking pedestal is used to vary the slope of the flume. Refer to the Figure 5 for details of the number and positions of the jacking pedestals on the different lengths of flume. A slope indicator is provided on the main jacking pedestal to provide a direct reading of the inclination of the channel bed.

Anchor bolts are supplied for securing the pivot pedestal, the main jacking pedestal and each intermediate jacking pedestal (where appropriate) to the floor. It is essential that these bolts be fitted to ensure stability of the flume in use. Bolts are also provided for fixing the circulating pump to the floor.

Electrical jacking is available as an optional extra at the time of ordering only (see S6-MKII Ordering Options). This adds an electric motor and slipping clutch to the manual arrangement with up/down/inch switches plus an additional Emergency Stop button. Electric limit switches disable the electrical drive at the maximum and minimum extent of travel. The controls for the electric jacking are located on the side of the channel bed, above the slope indicator, for convenient setting of the required slope. The slope can be adjusted continuously by setting the direction switch to UP or DOWN as required then setting the other switch to the RUN position. The motor will stop when either switch is set to the STOP position or when the appropriate limit switch is operated as the channel reaches maximum slope. The position can be finely adjusted by setting the second switch to the INCH position then repeatedly pressing the INCH button until the required slope is achieved. Set both switches to the STOP position when the channel is at the required slope. Power is connected to the electrical jacking system when the master switch (37) is switched on and the ‘Power On’ indicator (31) is illuminated. However, the jacking is only activated when any of the remote control switches on the side of the flume are activated.

A sediment loop can also be fitted as an optional extra during manufacture of the tilting flume (see Equipment Diagrams and S6-MKII Ordering Options). This loop consists of an additional pipe, with appropriate valves, that connects the outlet of the channel directly to the inlet of the pump allowing water to be continuously re circulated through the channel without passing through the sump tanks. This closed loop allows suspended sediment to be re-circulated through the channel without the settling that would occur in the sump tanks. When the sediment loop is fitted the centrifugal pump is also upgraded to allow it to be used with sediment up to a maximum grain size of 3mm.

Note: Figure 6 shows the sediment loop fitted to the S6-MKII-5M. The arrangement of valves and fittings associated with the sediment loop is identical on the longer versions of the flume, simply incorporating longer lengths of pipework as appropriate.

Location of Controls on Electrical Console for S6-MKII with S6-MKII-50 option fitted

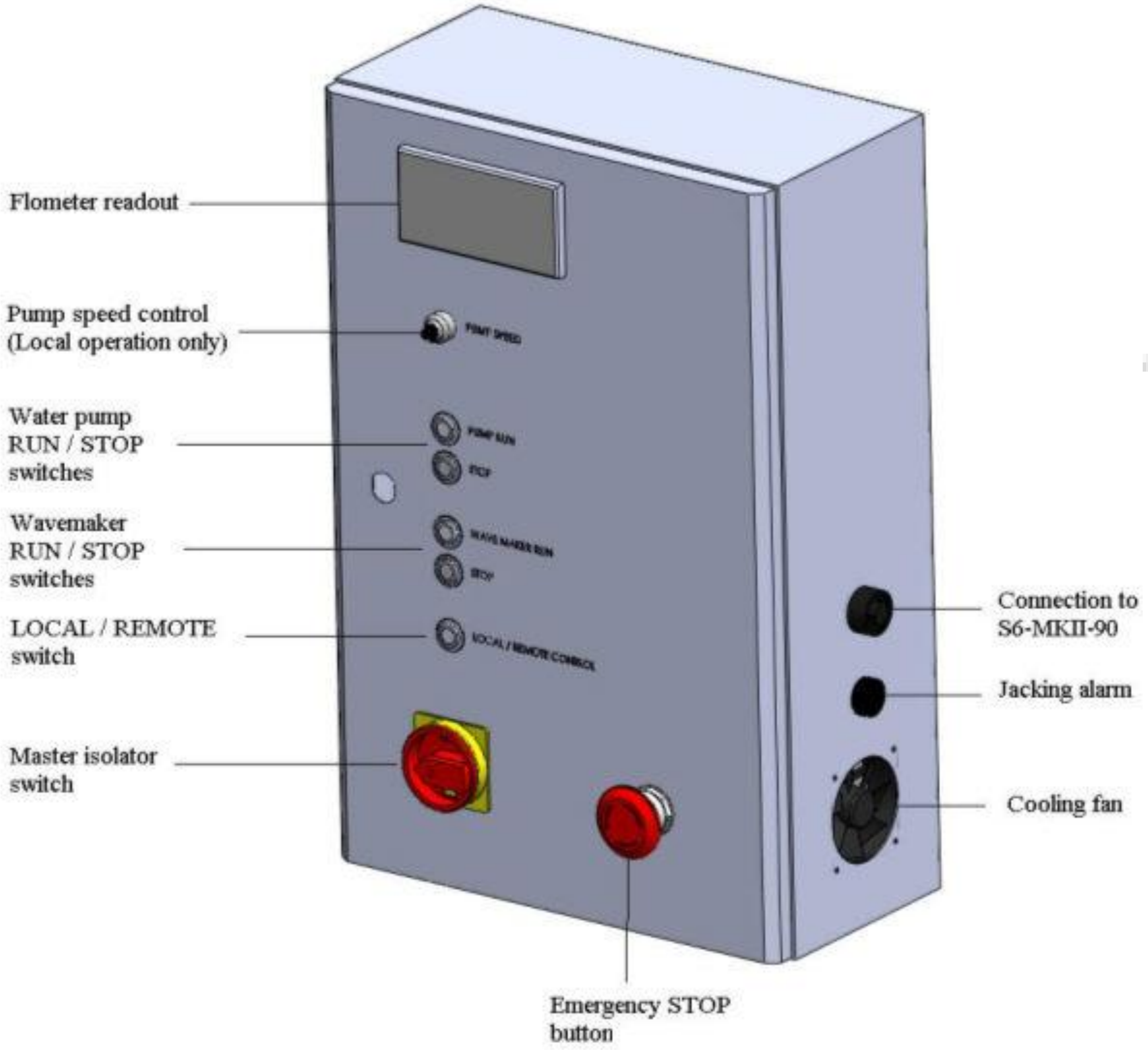

S6-MKII-50 Electrical Console

Note: The switches marked Wavemaker Run and Stop are only applicable when an optional wave maker accessory has been installed on the S6-MKII flow channel.

The S6-MKII-50 option includes a modified electrical console that allows measurement, control and data logging using an S6-MKII-90 (supplied with the S6-MKII-50 option) connected to a suitable user supplied PC.

Optional Experimental Models and Instrumentation

A range of standard models and instruments are available to accompany the S6 MKII as follows:

S6-20 Plate Weirs (Stainless Steel) consisting of:

A screw operated adjustable undershot plate weir (Full width)
A mounting frame with vent pipes (to aerate the nappe) to accommodate the following interchangeable overshot thin plate weirs:

Rectangular Notch (Full width).
Rectangular Notch (100 mm wide).
90° 'V' Notch.
60° ‘V’ Notch.
Trapezoidal (Cipolletti) Notch (Rectangular with ‘V’ ends).
Sutro Notch (Profiled to give linear height change with flow).

S6-21 Broad Crested Weirs consisting of:

A rectangular streamlined weir moulded from GRP.
A rectangular sharp cornered weir moulded from GRP (can be used in isolation or in combination with streamlined weir to increase its height).

S6-22 Venturi Flume consisting of:

A pair of GRP mouldings for installation against the side walls in the channel section to form a Venturi Flume.

S6-23 Ogee Weir & Manometer Board consisting of:

A weir with Ogee profile moulded from GRP and incorporating eight pressure tappings (2 upstream, 5 downstream and 1 at the apex) connected to a manometer board with bracket for mounting on side of flume.

S6-24 Dam Spillway Models consisting of:

A Dam Spillway profile moulded from GRP with removable top piers and the following interchangeable downstream sections:

- Spillway toe.
- Roller bucket toe.
- Apron with removable pegs to dissipate energy.
- Gravel box with stop logs.

S6-25 Syphon Spillway consisting of:

A part width Syphon spillway fabricated from clear acrylic and incorporating adjustable breather tube

S6-26 Self-regulating Syphon consisting of:

A full width Syphon fabricated from clear acrylic. An upstream lip and internal step (to deflect the nappe) create a liquid seal, allowing the Syphon to prime automatically when discharge increases.

S6-27 Roughened Beds consisting of:

Loose gravel bonded to a moulded GRP support to line the bed of the flume. Two different sizes of gravel are supplied with a different roughness factor. Each set consists of three modules arranged to cover a 2.5 m long section of flume.

S6-28 Vibrating Pile consisting of:

A cylindrical rod mounted vertically on a flexible support with the ability to change the length / natural frequency for the study of vortex shedding by piles and tall structures (to demonstrate flow-induced vibration).

S6-29 Lift & Drag Balance & Models consisting of:

A lever balance that can be mounted in two planes to allow measurement of lift or drag force on an object as required. Supplied with large diameter cylinder, small diameter cylinder and aerofoil section.

S6-30 Pitot Tube & Manometer consisting of:

A Pitot static tube, for measuring water velocity in the working section of the flume, mounted on a traversing carriage and incorporating vernier height adjustment. An inverted paraffin water manometer, with mounting bracket, measures the small differential pressures generated by the Pitot tube.

S6-31 Crump Weir consisting of:

A triangular weir moulded from GRP incorporating a single pressure tapping at the apex connected to a single piezometer tube with mounting bracket.

S6-32 Parshall Flume consisting of:

A Standing-wave flume moulded in GRP and incorporating a clear acrylic viewing window and clear acrylic stilling wells for level measurements. Allows comparison of head-flow characteristics with those published. This is one of the most widely used standing wave flumes for the measurement of water flow in open channels.

S6-33 WSC Flume (GRP) consisting of:

A trapezoidal flume moulded in GRP that was developed by Washington State College for the measurement of water flow in open channels. The flume profile conforms more closely to natural channel sections and passes sediment even more freely than the Parshall Flume.

S6-35 Wave Generator consisting of:

A drive system mounted on the discharge tank that utilises the base hinged weir, in the discharge tank, as the paddle to create regular waves in the working section. The variable speed motor with variable stroke adjustment allows frequency and amplitude of the waves to be varied.

Note: For satisfactory operation a wave absorbing beach is required to prevent reflected waves from causing interference in the working section. If the optional Beach (S6-36) is not used then a suitable beach must be fabricated at the inlet end of the flume to absorb the energy of the waves and minimise any reflections.

S6-36 Beach consisting of:
A perforated sloping structure that is located at the opposite end of the flume to the wave generator to absorb the energy of breaking waves and minimise reflected waves returning along the flume.

S6-37 Zagni Flow Monitoring System consisting of:
An instrument carriage fitted with a Pitot tube and interconnecting tubing to a free standing multi-tube manometer board. This system may be used to establish the basic parameters of fluid flow in the channel including invert (bed) slope, surface profiles, pressure profiles and velocity profiles.

S6-40 Instrument Carrier consisting of:
A carriage with three-point suspension that uses the instrument rails along the top of the flow channel to provide both longitudinal and transverse movement of appropriate instruments (not supplied). Used to position instruments at any location within the flow channel and incorporates a position lock.

S6-42 Velocity Meter and mountings consisting of:
A Propeller-type Velocity probe with battery operated meter that indicates the frequency of the rotating propeller. The probe is supplied with a calibration chart to provide accurate measurement of water velocity in the flume. The velocity probe incorporates a mounting for attachment to the S6-40 instrument carrier

S6-45 Random WaveMaker consisting of:
A drive system mounted on the discharge tank that utilises the base hinged weir, in the discharge tank, as the paddle. Regular or irregular waves can be produced using a suitable PC (not supplied) to control the drive system.

The actuator is mounted on top of the discharge tank and the associated electronics is mounted on the side of the tank.

Note: For satisfactory operation a wave absorbing beach is required to prevent reflected waves from causing interference in the working section. If the optional Beach (S6-36) is not used then a suitable beach must be fabricated at the inlet end of the flume to absorb the energy of the waves and minimise any reflections.

S6-MKII-50 Software Control and Data Acquisition consisting of:

A modified version of the S6-MKII electrical console together with an S6-MKII-90 Data Logging and Instrumentation system (described below). This option must be specified at the time of ordering the flume and cannot be fitted later.

18 Description

The modified electrical console incorporates a motor speed inverter to vary the speed of the water pump in addition to an inverter to operate the jacking system (when electric jacking is installed). A connection between the electrical console and the S6-MKII-90 allows measurement and logging of appropriate variables and control of water flowrate and bed slope directly from a PC (not supplied).

The S6-MKII-50 version of the electrical console incorporates a Local / Remote switch that allows control of the pump speed and jacking system either locally via the local controls or remotely via a PC connected to the S6-MKII-90

.

S6-MKII-90 Data Logging and Instrumentation System consisting of:

An electrical console with USB interface to a PC (not supplied) that can measure and log appropriate data from an S6-MKII and appropriate models and instruments, including the flowrate measured and displayed on the S6-MKII console. It incorporates ten pressure sensors and one differential pressure sensor allowing water levels, pressure distribution etc. to be monitored continuously. Water temperature, slope of bed and electrical outputs from two appropriate measuring instruments (user supplied) can also be monitored.

The S6-MKII-90 console is connected to the electrical control console on S6-MKII via a multi-way connector.

When supplied with a flume incorporating the S6-MKII-50 option described above, the PC can remotely vary the pump speed and the bed-slope (when electric jacking is installed) by controlling the inverters inside the console. The S6-MKII-50 version can also be operated manually via local controls if required.

Refer to the separate instruction manual supplied with S6-MKII-90 for details about connecting and using this accessory.

Although not dedicated to the S6-MKII range of flumes, the following measuring instruments, available from Armfield, may be used in conjunction with the S6-MKII:

H1-3 Vernier Hook & Point Gauge consisting of:

A rugged vernier height gauge with 450mm range, incorporating mounting for attachment to the S6-40 Instrument Carrier. Supplied with a stainless steel hook and point for measurement of water level with a resolution of 0.1mm and accuracy better than 0.2mm.

H1-8 Digital Hook & Point Gauge consisting of:
A battery-operated digital height gauge with 500mm range, incorporating mounting for attachment to the S6-40 Instrument Carrier. Supplied with stainless steel hook and point for measurement of water level with a resolution of 0.01mm and accuracy better than 0.03mm.

H30-3G Pitot Tube & Digital Manometer consisting of:
A Pitot-static tube with remote hand-held digital meter giving a direct readout of differential pressure. This instrument is an alternative to the S6-30 described above that uses a kerosene over water manometer.

H33 Propeller Velocity Meter consisting of:
A battery-operated instrument H33-10 used to measure water velocity in the range 0.025 to 1.5 m/sec or 0.6 to 3.0 m/sec using propeller probes that are available separately.
H33-1 is a low speed probe with operating range 0.025 to 1.5 m/sec.
H33-2 is a high speed probe with operating range 0.6 to 3.0 m/sec.
H33-3 is a right angled probe used to measure velocity vertically with operating range 0.025 to 1.5 m/sec. This probe is not appropriate for use with S6-MKII unless special project work involves measurement of velocities vertically.
Measurements can be continuously logged using S6-MKII-50.
This instrument is an alternative to S6-42 that includes H33-10 with H33-1.

H40-2-2 Wave Probe System consisting of:
A mains-operated power supply and two channel electronic module with two 500mm long probes, used to measure the depth of water using the principle of conductivity between parallel wires. Provides a continuous voltage output proportional to height of water that allows wave height etc to be monitored at two locations simultaneously using a chart recorder or data logger (not supplied).
Measurements can be continuously logged using S6-MKII-50.

Operation

Where necessary, refer to the drawings in the Equipment Diagrams section.

Operating the Equipment

Adjusting the slope of the bed

A handwheel on the end jacking pedestal allows the slope of the channel bed to be varied. For convenience the actual slope is displayed on an indicator adjacent to the handwheel. The scale is calibrated to give a slope value of one in <scale reading>, e.g. a value of 200 on the scale corresponds to a slope of 1 in 200, or 0.3°

For safe operation it is suggested that the pump is stopped and the water is drained from the channel section before operating the jacking system.

Where optional electric jacking has been supplied the appropriate switches are operated as follows. The controls for the electric jacking are located on the side of the channel bed, above the slope indicator, for convenient setting of the required slope. The slope can be adjusted continuously by setting the direction switch to UP or DOWN as required then setting the other switch to the RUN position. The motor will stop when either switch is set to the STOP position or when the appropriate limit switch is operated as the channel reaches maximum or minimum slope. The position can be finely adjusted by setting the second switch to the INCH position then repeatedly pressing the INCH button until the required slope is achieved. Set both switches to the STOP position when the channel is at the required slope.

When the optional S6-MKII-50 electrical console has been supplied, the jacking can be controlled from a PC as follows:

With the Local / Remote switch on the S6-MII-50 electrical in the Local position (not depressed and not illuminated), the jacking is operated via the switch box in the same way as a standard S6-MKII but cannot be operated remotely using a PC.

With the Local / Remote switch on the S6-MII-50 electrical in the Remote position (depressed and illuminated), the jacking system can be operated using the switch box on the side of the S6-MKII or using the Jacking Control section in the S6-MKII-50 software as required. However, if the jacking system is initiated via the software then it must be stopped via the software. If the jacking system is initiated via the switch box then it must be stopped via the switchbox. Limit switches will stop the jacking system at the limit of its travel whichever control method is used.

When using the software the jacks can be raised by clicking the Jack Up button until the required slope is indicated (indicated in degrees). Clicking the Jack Up button again will stop the jacking. Similarly, the jacks can be lowered by clicking the Jack Down button until the required slope is indicated (indicated in degrees). Clicking the Jack Down button again will stop the jacking.

Varying the water flowrate (Standard S6-MKII electrical console)

The hand operated flow control valve should be closed before starting the centrifugal pump. This allows the pump to start under minimum load and prevents water from surging through the channel and pipework when the pump is started.
Press the Pump Start button on the console. The Pump Running indicator will illuminate and the pump will be heard to start.

With the pump running gradually rotate the handwheel on the flow control valve to achieve the required flow. Note that there will be a slight delay before water enters the channel section if the inlet tank is not already filled with water. Close the flow control valve fully then press the Pump Stop button to stop the circulating pump.
If the flow control valve is left partially open when the pump is stopped water will drain from the channel and inlet tank into the sump tanks via the flow control valve and pump. Unless it is required to drain the water it is therefore usual to close the flow control valve before stopping the pump. This retains the water in the system ready for the next run and the flow control valve is closed ready for starting the pump again.

Note: To obtain accurate and stable readings from the flowmeter it is essential that the flowmeter is full of water and no air bubbles are entrained in the water. Before operating the system at low flowrate it will be necessary to increase the flow of water to prime the pipework fully with water and flush all air from the pipework. By closing the flow control valve before switching off the pump, water will be retained in the pipework eliminating the need to re-prime the system when the pump is restarted.

Varying the water flowrate (Optional S6-MKII-50 electrical console with S6-MKII-90)

The hand operated flow control valve should be closed before starting the centrifugal pump. This allows the pump to start under minimum load and prevents water from surging through the channel and pipework when the pump is started.
Set the pump speed control on the console to minimum the press the Pump Start button. The Pump Start switch will illuminate and the pump will operate at 20% speed.

Adjust the pump speed control to 30% then gradually open the flow control valve until fully open. Note that there will be a slight delay before water enters the channel section if the inlet tank is not already filled with water. Adjust the speed control to give the required flowrate. If it is required to operate at extremely low flowrate or to limit the maximum flowrate when the pump is operating at maximum speed then the flow control valve can be adjusted to achieve the required operating conditions.

Close the flow control valve fully, set the pump speed control to minimum then press the Pump Stop button to stop the circulating pump.
If the flow control valve is left partially open when the pump is stopped water will drain from the channel and inlet tank into the sump tanks via the flow control valve and pump. Unless it is required to drain the water it is therefore usual to close the flow control valve before stopping the pump. This retains the water in the system ready for the next run and the flow control valve is closed ready for starting the pump

again.

Note: To obtain accurate and stable readings from the flowmeter it is essential that the flowmeter is full of water and no air bubbles are entrained in the water. Before operating the system at low flowrate it will be necessary to increase the flow of water to prime the pipework fully with water and flush all air from the pipework. By closing the flow control valve before switching off the pump, water will be retained in the pipework eliminating the need to re-prime the system when the pump is restarted.
36 Operation

Using the optional sediment loop

When the optional sediment loop is fitted it is necessary to set the two isolating valves adjacent to the pump inlet to configure the flume for normal operation or sediment loop operation as required.

For normal use the top isolating valve should be fully closed and the bottom isolating valve should be fully open. With the valves in this arrangement water drawn from the sump tanks flows through the working section then drains at the discharge end back into the sump tanks for re-circulation.

For use as a sediment loop the top isolating valve should be fully open and the bottom isolating valve should be fully closed. With the valves in this arrangement water is drawn from the discharge end of the working section and delivered directly back to the inlet end of the working section re-circulating continuously without passing through the sump tanks. Before operating the sediment loop in this manner it will be necessary to fill the flume to the required depth from the sump tanks by raising the discharge weir and operating the flume with the isolating valves set for normal operation.

The pump fitted with a sediment loop is designed to operate with suspended sediment up to a maximum grain size of 3mm.

Measuring the water flowrate

The instantaneous flow of water into the inlet tank is displayed in units of litres/sec on the digital display on the electrical enclosure. The secondary display on the flowmeter indicates the percentage of maximum flowrate where 100% range = 30 litres/sec.

Note that the instantaneous flow through the channel section may be different depending on the conditions in the channel (until water levels stabilise, the flow along the channel and the flow leaving via the discharge tank will be different to the flow of water entering the inlet tank).

Note: To obtain accurate and stable readings from the flowmeter it is essential that the flowmeter is full of water and no air bubbles are entrained in the water. Before operating the system at low flowrate it will be necessary to increase the flow of water to prime the pipework fully with water and flush all air from the pipework. By closing the flow control valve before switching off the pump, water will be retained in the pipework eliminating the need to re-prime the system when the pump is restarted.

Adjusting the height of water in the channel section

The height of water in the working section of the channel can be changed by raising or lowering the overshot weir in the discharge tank. The weir is raised or lowered using the winch that is located on top of the discharge tank. Rotate the handle in the required direction to raise or lower the weir.

The mechanical advantage of the winch allows the weir to be adjusted when it is subjected to maximum loading with the channel full of water. The winch incorporates a brake so that the weir cannot fall in use.

If it is required to lower the weir to its lowest position then it may be necessary to physically push the weir, especially if no water is present in the channel section.

Note: Care should be taken when lowering the weir to avoid a surge along the channel into the discharge tank. As stated above, water can be drained from the channel by opening the flow control valve and allowing the water to flow backwards through the pump. This gives fine control of water level in the channel section. Where a model is installed in the working section it is preferable to use this technique - draining water to the required level then lowering the weir to the required height to avoid damage to the model

Adjusting water velocity in the channel section

The velocity of the water in the working section will depend on the flowrate and the depth of water. The flowrate and overshot weir (in the discharge tank) should therefore be adjusted individually, as described above, but in combination to achieve the required conditions in the channel.

In order to 'pond' the flume during water testing, wave experiments etc. the overshot weir (in the discharge tank) should be raised to the required level and water admitted by operating the pump / opening the flow control valve. When the water is at the required level close the flow control then switch off the pump.

Using the model mounting points in the bed of the channel.

Ensure that a sealing plug with integral ‘O’ ring seal is fitted to all model mounting points that are not in use. To minimise disturbances to flow in the channel ensure that the plugs are pushed down fully so that the top of the plug is flush with the channel bed.

When a model is to be fitted using a model mounting point, the sealing plug should be removed by pushing upwards from below.

Refer to Assembly Instructions for the Optional Models for operating instructions and detailed teaching exercises for each of the available accessories.

Note: Older versions of the S6 flume and associated models used a plunger arrangement fitted into the model mounting point that allowed a mounting spigot to be inserted from above to locate the model.

If it is required to use a new model with an original flume that incorporates a plunger, unscrew the large nut on the underside of the bed then remove the plunger assembly from above to allow the new model to be fitted. The sealing plug supplied with the new model can be inserted into the mounting point when the model is not in use or

the plunger assembly can be refitted if necessary.
If it is required to use an original model with a new flume then contact Armfield for further advice and options.

Operating the optional S6-MKII-50 interface
For information on installing and operating the optional S6-MKII-50 interface refer to the separate instruction manual supplied with S6-MKII-50.

Equipment Specifications

Overall Dimensions

Width - 300mm

Depth - 450mm

Length - as ordered (from 5m in multiples of 2.5m)

Note: length overall is 3.25m longer than the working section defined to allow for the inlet and discharge tanks
Walls - Toughened Glass
Bed - Stainless Steel
End Tanks - GRP mouldings
Sump Tanks - Polyethylene
Pipework - PVC
Pump - Close coupled, centrifugal
Flowrate - 30 litres/second
Flow regulation valve - Handwheel operated butterfly valve
+Ve slope 1:40 max (1.432 degrees) for all lengths
-Ve slope 1:200 max (0.286 degree) for all lengths
Flow Meter - Electromagnetic with digital display

Electromagnetic Compatibility

This apparatus is classified as Education and Training Equipment under the Electromagnetic Compatibility (Amendment) Regulations 1994. Use of the apparatus outside the classroom, laboratory or similar such place invalidates conformity with the protection requirements of the Electromagnetic Compatibility Directive (89/336/EEC) and could lead to prosecution.

Equipment Location

Careful consideration must be given when choosing a suitable site for the tilting flume to allow adequate space for operation and maintenance. As well as leaving adequate floor space for access to the flume and sump tanks, adequate clearance must be available overhead to allow for tilting of the channel, mounting of models operation of instrumentation etc.

The floor area should be clean, level and capable of bearing the loads imposed by the equipment. The pivot support and jacking pedestal bases must be anchored to the floor by means of the anchor bolts supplied to ensure that the tilting flume is stable in use. The composition of the floor should be such as to enable holes to be drilled to accommodate the anchor bolts.

Note: The support pedestals incorporate feet that limit the load on the floor to a maximum of $0.2 N/mm^2$. Height adjustment must be carried out using the levelling screws fitted. Packing should not be inserted beneath the feet that would cause a local increase in floor load.

A source of clean cold water will be required for filling the sump tanks. Permanent connection to the source of cold water will not be required.

A suitable drain will be required when emptying the sump tanks for cleaning / maintenance. Permanent connection to the drain will not be required.

The equipment requires a Three Phase electrical supply that must include a Neutral connection and an Earth connection (5 wire). The electrical console incorporates an RCD (38) to protect the operator if through misuse or accident the equipment becomes electrically dangerous.

Where power operated jacks have been ordered the electrical console incorporates the controller necessary to operate the jacking motor. The jacking motor is simply connected to the appropriate terminals (39) inside the electrical console during installation of the flume.

Environmental Conditions

This equipment has been designed for operation in the following environmental conditions. Operation outside of these conditions may result reduced performance, damage to the equipment or hazard to the operator.

a. Indoor use;
b. Altitude up to 2000m;
c. Temperature 5°C to 40°C;
d. Maximum relative humidity 80% for temperatures up to 31°C, decreasing linearly to 50% relative humidity at 40°C;
e. Mains supply voltage fluctuations up to ±10% of the nominal voltage;
f. Transient over-voltages typically present on the MAINS supply;

Note: The normal level of transient over-voltages is impulse withstand (over voltage) category II of IEC 60364-4-443;

g. Pollution degree 2.
Normally only nonconductive pollution occurs.
Temporary conductivity caused by condensation is to be expected.
Typical of an office or laboratory environment.

Laboratory Teaching Exercises

Index to Exercises

Note: When using the appropriate Armfield Teaching Software (optional accessory) the Teaching Exercises may differ slightly and it is suggested that reference is made to the help text incorporated in the software rather than this instruction manual.

Assembly Instructions for the Optional Models

Note: The following instructions relate to the installation of current models into the current S6-MKII flume whereby appropriate models are retained by a sealed clamping arrangement through the bed of the flume that positively prevents the model from lifting in operation.

If it is required to mount new models into an older flume that is fitted with a plunger arrangement, or to fit older models requiring a spigot into the current flume then refer to the notes at the end of this section for further information. Models secured by retaining bars or clamps onto the top rails are not affected by the type of clamping arrangement at the bed.

Model mounting points are included along the length of the working section, each point incorporating a push-fit sealing plug that can be removed to facilitate the mounting of a model. The majority of the model hydraulic structures available for use with the S6-MKII flume utilise these mounting points so that the model is securely retained against the bed of the flume when in use.

Where securing is not possible using a model mounting point, an adjustable retaining bar is used that clamps between the two glass walls of the flume and/or clamps at the top to retain the model in position.

When installing any of the optional models supplied by Armfield it is essential that the working section of the flume is drained before removing the sealing plug from the bed to prevent loss of water that could present a hazard.

Most of the models have rubber sealing strips on the sides (where appropriate) to reduce the amount of water seeping past. If insertion of a model is difficult because of the rubber seals, the seals can be lubricated using soap solution or similar water soluble lubricant (not supplied) to assist with the insertion of the model. The use of grease or silicone based lubricants should be avoided as these will coat the glass sides of the flume and affect wetting of the surfaces in use.

Where accurate results are required it is necessary to eliminate the flow of water between the model and the bed / walls of the flume. The seals fitted to the models will limit the amount of leakage but for accurate results Plasticine (not supplied) or similar material should be used to seal any leaks. This is pressed into the gaps on the upstream side of the model, as shown below, thus ensuring that water flows over the model and not around or under it.

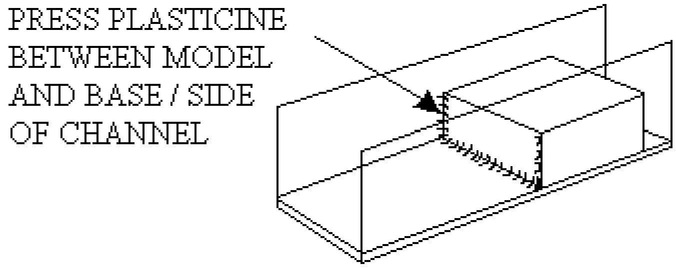

Some models incorporate small holes near the top, on the sides, which allow air to bleed out whilst the model is submerged. Air bubbles' escaping from these holes is normal when the model becomes fully submerged.

Scales are attached to the glass walls upstream and do

wnstream of one model
mounting point to allow the level of the water to be measured. If an alternative measuring device, such as a hook and point gauge, is not available then the model

should be installed between the scales to allow the upstream and downstream water levels to be measured.

The glass support brackets between the level scales are modified to allow them to be moved when installing long models such as the S6-32 Parshall Flume or S6-33 WSC Flume. This can also help when installing the S6-27 Roughened beds in the centre section of the flume. Removal of the fixing screw on the appropriate glass support brackets allows the brackets to be slid along the box section creating an opening long enough for insertion of the model. The brackets should be slid back into position after installing the model.

The mounting requirement for each of the optional models differs from one model to another, as described below:

S6-20 Plate Weirs (Stainless Steel)

Adjustable undershot weir:

This model is installed as shown in the diagram below using clamps on either side, at the top, that secure the frame to the box sections that support the instrument rails along the top of the working section.

Before installing the weir, lubricate the seals on both sides of the weir plate to aid installation and subsequent height adjustment via the hand wheel at the top.

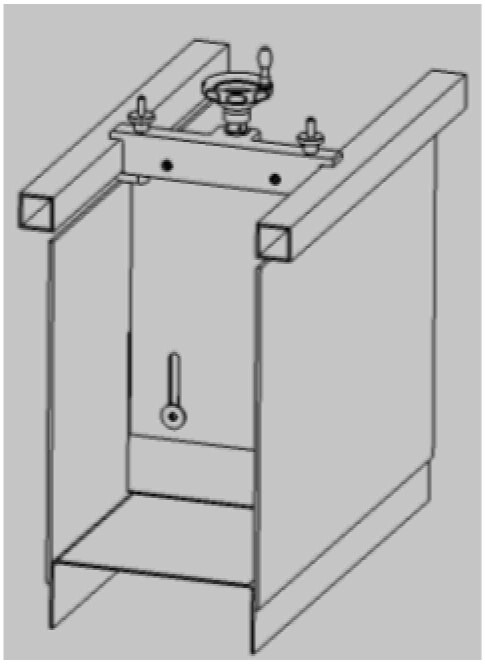

Refer to Exercises A, B, C and D for experimental details about this accessory.

Thin plate weirs:

This set of models is installed using one of the model mounting points in the bed of the flume.

Attach the required thin plate weir to the support frame and lubricate the seals on the sides of the frame. The frame should be installed with the weir plate upstream and the nappe ventilation tubes (used with the rectangular weir) facing downstream. At the required location, remove the sealing plug from the bed of the flume by pushing up from below then carefully insert the model into the working section ensuring that the boss is located squarely through the hole in the bed of the flume. Lubricate the seal on the locking handle then screw on the locking handle from below and tighten until the ‘O’ ring seal is compressed.

Refer to Exercises E and F for experimental details about this accessory.

S6-21 Broad Crested Weirs (GRP)

This model is installed using one of the model mounting points in the bed of the flume.

The larger, rounded top weir incorporates a permanent locating boss and can be fitted directly into the flume.

The shorter, square top weir can be used on its own by installing the stepped locating boss (tapped hole one end only) through the opening in the top of the weir. This weir can also be used in combination with the rounded top weir to raise the height of the rounded top weir. In this instance the plain locating boss (tapped holes both ends) is screwed onto the existing boss before installing the combination as shown below.

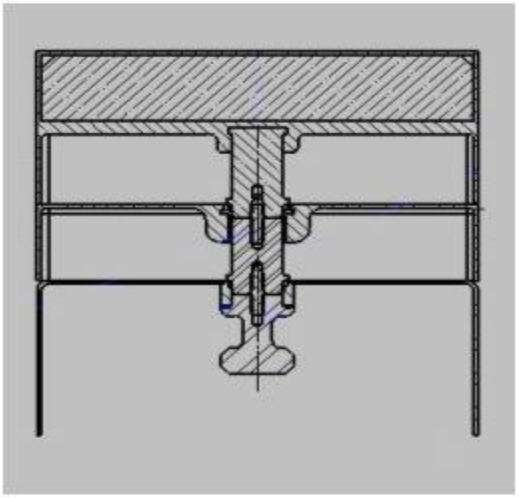

At the required location, remove the sealing plug from the bed of the flume by pushing up from below then carefully insert the model into the working section ensuring that the boss is located squarely through the hole in the bed of the flume. Lubricate the seal on the locking handle then screw on the locking handle from below and tighten until the ‘O’ ring seal is compressed.

Refer to Exercises G & H for experimental details about this accessory.

S6-22 Venturi Flume

This model is installed using a spreader bar in combination with clamps at the top. Install the pair of GRP mouldings against the glass walls of the working section with the narrow end facing downstream, to form a Venturi Flume.
An adjustable retaining bar is used to push the mouldings against the side walls.

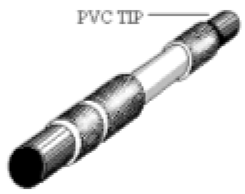

Locate the bar in the throat of the Venturi Flume and adjust the threaded end so that it clamps between the two GRP sections as shown below. The retaining bar must be placed above the water level so as not to disturb the flow of water.

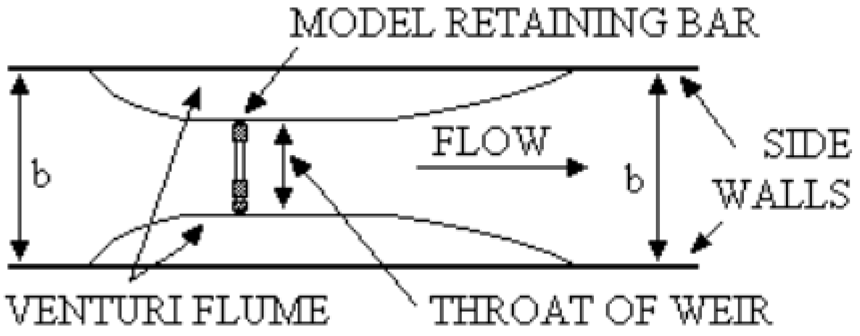

In addition to the model retaining bar, the Venturi flume uses two clamps, which slot under the top rail of the working section and hold each side against the bed of the flume. Two types of clamping bracket are supplied to allow the model to be installed on MkI or MkII versions of the S6.

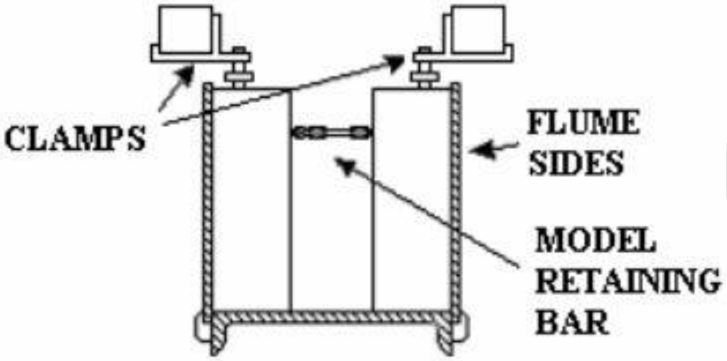

Refer to Exercise J for experimental details about this accessory.

S6-23 Ogee Weir & Manometer Board

The GRP moulding is installed using one of the model mounting points in the bed of the flume. The manometer is installed on the side of the flume using the integral bracket.

At the required location, remove the sealing plug from the bed of the flume by pushing up from below. Lubricate the seals on the sides of the model and the ‘O’ ring on the underside that seals the model to the channel bed, then carefully insert the model into the working section. Feed the flexible manometer tubing through the hole in the bed then lower the model into position, ensuring that no tubing becomes trapped, until the boss is located squarely through the hole in the bed of the flume. Fit the locking nut on the underside and tighten it until the ‘O’ ring seal is compressed.

Locate the manometer bank on the side of the flume and connect the flexible tubes from the Ogee weir to the tappings at the base of the manometer. When the flume is filled with water, any air bubbles can be eliminated from the flexible tubing by raising and lowering the manometer until all tubes are completely filled. Any remaining bubbles can be removed by inserting the syringe supplied into the top of the appropriate manometer tube then drawing water through the flexible tubing from the submerged tapping.

Refer to Exercise K for experimental details about this accessory.

S6-24 Dam Spillway Models

The Ogee shaped spillway is installed using one of the model mounting points in the bed of the flume. The downstream sections (Spillway toe, Roller bucket toe or Apron with removable energy dissipater) can be attached to the spillway to prevent movement downstream.

At the required location, remove the sealing plug from the bed of the flume by pushing up from below then carefully insert the model into the working section ensuring that the boss is located squarely through the hole in the bed of the flume. Lubricate the seal on the locking handle then screw on the locking handle from below and tighten until the ‘O’ ring seal is compressed. If it is required to incorporate a downstream section, insert the lug on the downstream section into the slot at the base of the spillway before pushing the spillway down and tightening the locking handle.

If it is required to change the downstream section, unscrew the locking handle and raise the spillway sufficiently to allow the lug on the downstream section to disengage then install the alternative downstream section as before.

A set of three removable piers can be inserted on top of the spillway to demonstrate the disturbance associated with such a structure. The pier assembly is retained using a clamp at either side that locate under the box sections that support the instrument rails at the top of the working section as shown below. Two types of clamping bracket are supplied to allow the model to be installed on MkI or MkII versions of the S6.

When using the optional Gravel Box as a downstream energy dissipater, a retaining bar is inserted at the downstream end to prevent the box from moving.

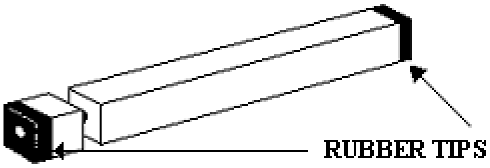

The retaining bar clamps between both side walls by unscrewing the screwed end until the bar is tight between the walls.
Refer to Exercise L for experimental details about this accessory.

S6-25 Syphon Spillway (Acrylic)

This model is installed using one of the model mounting points in the bed of the flume.
At the required location, remove a sealing plug from the bed of the flume by pushing up from below. Lubricate the seals on the sides of the model then carefully insert the model into the working section ensuring that the boss is located squarely through the hole in the bed of the flume. Lubricate the seal on the locking handle then screw on the locking handle from below and tighten until the 'O' ring seal is compressed.
Refer to Exercise M for experimental details about this accessory.

S6-26 Self-regulating Syphon

This model is installed using one of the model mounting points in the bed of the flume. At the required location, remove a sealing plug from the bed of the flume by pushing up from below. Lubricate the seals on the sides of the model then carefully insert the model into the working section ensuring that the boss is located squarely through the hole in the bed of the flume. Lubricate the seal on the locking handle then screw on the locking handle from below and tighten until the ‘O’ ring seal is compressed.
Refer to Exercise N for experimental details about this accessory.

S6-27 Roughened Beds

To aid installation of the central sections of the roughened bed, remove the fixing screw on each of the glass support brackets between the level scales on the glass walls then slide the brackets along the box section to create an opening for the model. The glass support brackets should be slid back into position after installing the sections of the model.
The artificially roughened bed (gravel or corrugated) relies on its own weight to hold it onto the channel bed. It is aided by a retaining bar located at the downstream end of the sections to prevent the gravel bed from sliding along the channel bed due to the movement of the water.

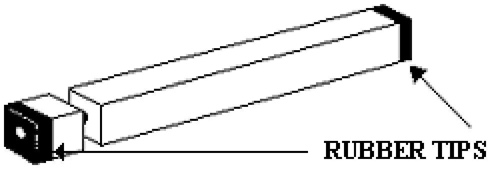

The retaining bar clamps between both side walls by unscrewing the screwed end until the bar is tight between the walls.
Refer to Exercises P (Gravel) and Q (Corrugated) for experimental details about this accessory.

S6-28 Vibrating Pile

Attach the structure to the instrument rails at the required position in the working section and tighten the clamping screw.
Adjust the height of the clamps to change the length and the corresponding natural frequency of the structure.
Refer to Exercise R for experimental details about this accessory.

S6-29 Lift & Drag Balance & Models

Assemble the balance and attach the frame to the instrument rails at the required position by tightening the clamping screws.

The balance arm should be in line with the channel and facing downstream when performing Drag measurements.

The lever arm should be normal to the working section when performing Lift measurements using the hydrofoil.

The small cylinder, large cylinder or hydrofoil is attached to the underside of the balance when required.

Refer to Exercise S for experimental details about this accessory.

S6-30 Pitot Tube & Manometer

Refer to Data Sheet 3: Operating the S6-30 Pitot tube and manometer and Data Sheet 7: Calibration of S6-30 Pitot Tube and Manometer for further information on installing and using this accessory.

S6-31 Crump Weir

The GRP moulding is installed using one of the model mounting points in the bed of the flume. The manometer is installed on the side of the flume using the integral bracket.

At the required location, remove a sealing plug from the bed of the flume by pushing up from below. Lubricate the seals on the sides of the model and the ‘O’ ring on the underside that seals the model to the channel bed, then carefully insert the model into the working section with the long slope facing downstream. Feed the flexible manometer tube through the hole in the bed then lower the model, ensuring that the tubing does not becomes trapped, until the boss is located squarely through the hole in the bed of the flume. Fit the locking nut on the underside and tighten it until the ‘O’ ring seal is compressed.

Locate the manometer tube on the side of the flume and connect the flexible tube from the underside of the crump weir to the tapping at the base of the manometer.

When the flume is filled with water, any air bubbles can be eliminated from the flexible tube by raising and lowering the manometer until the tube is completely filled.

Any remaining bubbles can be removed by inserting the syringe supplied into the topof the manometer tube then drawing water through the flexible tubing from the submerged tapping.

Refer to Exercise T for experimental details about this accessory.

S6-32 Parshall Flume

Remove the fixing screw on each of the glass support brackets between the level scales on the glass walls then slide the brackets along the box section to create an opening for the model.

Install the GRP moulding with the flow arrow on the top facing in the direction of the water flow. When correctly installed the clear viewing window and stilling wells will be facing the operator. The glass support brackets should be slid back into position after installing the model.

Secure the moulding in position using two clamps, one on each side, which slot under the top rail of the working section and hold the accessory against the bed of the flume. Two types of clamping bracket are supplied to allow the model to be installed on MkI or MkII versions of the S6.

Refer to Exercise S for experimental details about this accessory.

S6-33 WSC Flume (GRP)

Remove the fixing screw on each of the glass support brackets between the level scales on the glass walls then slide the brackets along the box section to create an opening for the model.
Install the GRP moulding with the flow arrow on the top facing in the direction of the water flow. The inclined scale will be upstream when correctly installed.
The glass support brackets should be slid back into position after installing the model.
Secure the moulding in position using two spreader bars by unscrewing the tip to clamp the bar against the glass. Position one bar at the downstream end (above the water level) to prevent the model from sliding downstream. Position the second bar on top of the model at mid position to prevent the model from lifting.
Refer to Exercise U for experimental Details about this accessory.

S6-35 Wave Generator

Refer to Data Sheet 4: Operating the S6-35 Wave Generator for further information on installing and operating this accessory.

S6-36 Beach

Refer to Data Sheet 6: Operating the S6-36 Beach for further information on installing and operating this accessory.

S6-37 Zagni Flow Monitoring System

Refer to Data Sheet 10: Operating the S6-37 Flow Monitoring System for further information on installing and operating this accessory.

S6-40 Instrument Carrier

The instrument carrier is a carriage with three-point suspension that uses the instrument rails along the top of the flow channel to provide both longitudinal and transverse movement.
Before installing the carrier, loosen the screw on the position clamp. The carrier should be placed on the rails with the flat roller on the square rail and the Vee rollers on the circular rail. The clear acrylic cursor will be located in front of the longitudinal scale on the square rail when the carrier is correctly fitted.
Different instruments can be attached to the carrier using appropriate holes in the triangular plate.

S6-42 Velocity Meter and mountings

The probe is supplied complete with a mounting bracket suitable for attachment to the S6-40 Instrument Carrier. By releasing the screws on the clamp bar, the height or orientation of the probe can be varied.
The mounting bracket should be attached to the instrument carrier using the screws provided. The small ‘v’ at the end of the bracket will be positioned over the large hole in the carrier when correctly assembled.
Alternatively, a rectangular post can be attached to the underside of the instrument carrier to lower the mounting bracket if velocity measurements are required adjacent to the bed of the flume.

S6-45 Random WaveMaker

Refer to Data Sheet 5: Operating the S6-45 Random WaveMaker for further information on installing and operating this accessory.

S6-MKII-90 Software Control and Data Acquisition

Refer to the separate instruction manual supplied with S6-MKII-90 for details on installing and operating this accessory.

Using newer models with through-the-bed mounting in an older flume

The original S6-MkI flume and older versions of the S6-MkII flume used a plunger arrangement as the model mounting point in the bed of the flume. When the plunger was retracted downwards, the hole created allowed a loose mounting spigot to be inserted to locate the model. The associated models incorporated a hole in the underside to accommodate the top of the spigot.

If it is required to use a newer model, with the revised ‘through-the-bed’ mounting arrangement, in a flume that incorporates a plunger in each mounting point then it will be necessary to unscrew and remove the plunger assembly to allow the new model to be fitted. When the clamping nut has been removed from the underside of the plunger assembly, the plunger assembly can be pushed vertically upwards to remove it. The sealing plug supplied with the new model can be inserted into the mounting point when the model is not in use or the plunger assembly can be refitted if necessary.

Using older models with spigot-mount in a new flume

If it is required to use an original spigot-mounted model with a new flume then contact Armfield for further advice and available options.

Data Sheet 1: General Nomenclature

Name	Symbol	Unit	Definition
Width of channel/weir etc	b	m	Measured
Gravitational constant	g	$m\ s^{-2}$	$9.81m\ s^{-2}$
Difference in manometer readings		m	Calculated = $(h_1 – h_2)$
Volumetric flowrate	Q	$m^3\ s^{-1}$	Measured or calculated
Hydraulic mean radius of section	R	m	Calculated
Temperature of water in the channel	T	$^{\circ}C$	Measured
Local fluid velocity	v	$m\ s^{-1}$	Measured or calculated
Mean fluid velocity	V	$m\ s^{-1}$	Calculated
Density of fluid	ρ	$kg\ m^{-3}$	From table
Kinematic Viscosity of water	υ	m^2	From table
Angle	θ	degrees	Measured
Mass	M	kg	Measured
Area	A	m^2	Measured
Static pressure	p_s	Nm^{-2}	Measured
Total pressure	p_t	Nm^{-2}	Measured
Area Ratio between different sections	A	-	Calculated
Reynolds Number	Re	-	Calculated
Distance along channel (subscript)	x	m	Measured

Note: Subscripts are used to indicate the location along the length of the channel, where appropriate.

Data Sheet 2: Nomenclature for Free Surface Flow

The following nomenclature has been used for the theory presented with the free surface flow experiments:

Note: For free surface flow experiments, it has been assumed that the velocity distribution is uniform across the section, and each fluid layer moves at velocity v. Thus the velocity head indicated by the Pitot tube for one layer of the fluid is assumed to be the same for every other layer, and so represents the kinetic energy per unit weight of fluid.

Name	Symbol	Unit	Definition
Velocity of gravity wave in still shallow water	c	ms^{-1}	(sometimes called celerity)
Coefficient of contraction	C_c	-	
Coefficient of discharge	C_d	-	
Coefficient of velocity	C_v	-	$0.95<C_v<1.0$
Specific energy head (total energy head measured relative to channel bed)	E	m	$E = y + V^2/2g$ **Note:** If the datum is the channel bed then $E = H$ $(z = 0)$
Force of a stream	F	N	$F = \rho gby^2/2 + \rho Q^2/by$
Drag Force exerted by fluid	D	N	Measured
Total energy head or total head (height of energy line (e) above a datum)	H	m	$H = y + V^2/2g + z$
Loss of total head between specified sections		m	
Pressure at height z above channel bed	p_z	Nm^{-2}	Measured
Height of weir crest above channel bed	h_w	m	Measured
Depth of water surface above the bed at location x	y_x	m	Measured
Depth of water surface upstream above crest of weir	y_c	m	Measured
Critical depth	y_{crit}	m	Depth at which specific energy of flow is at a minimum.

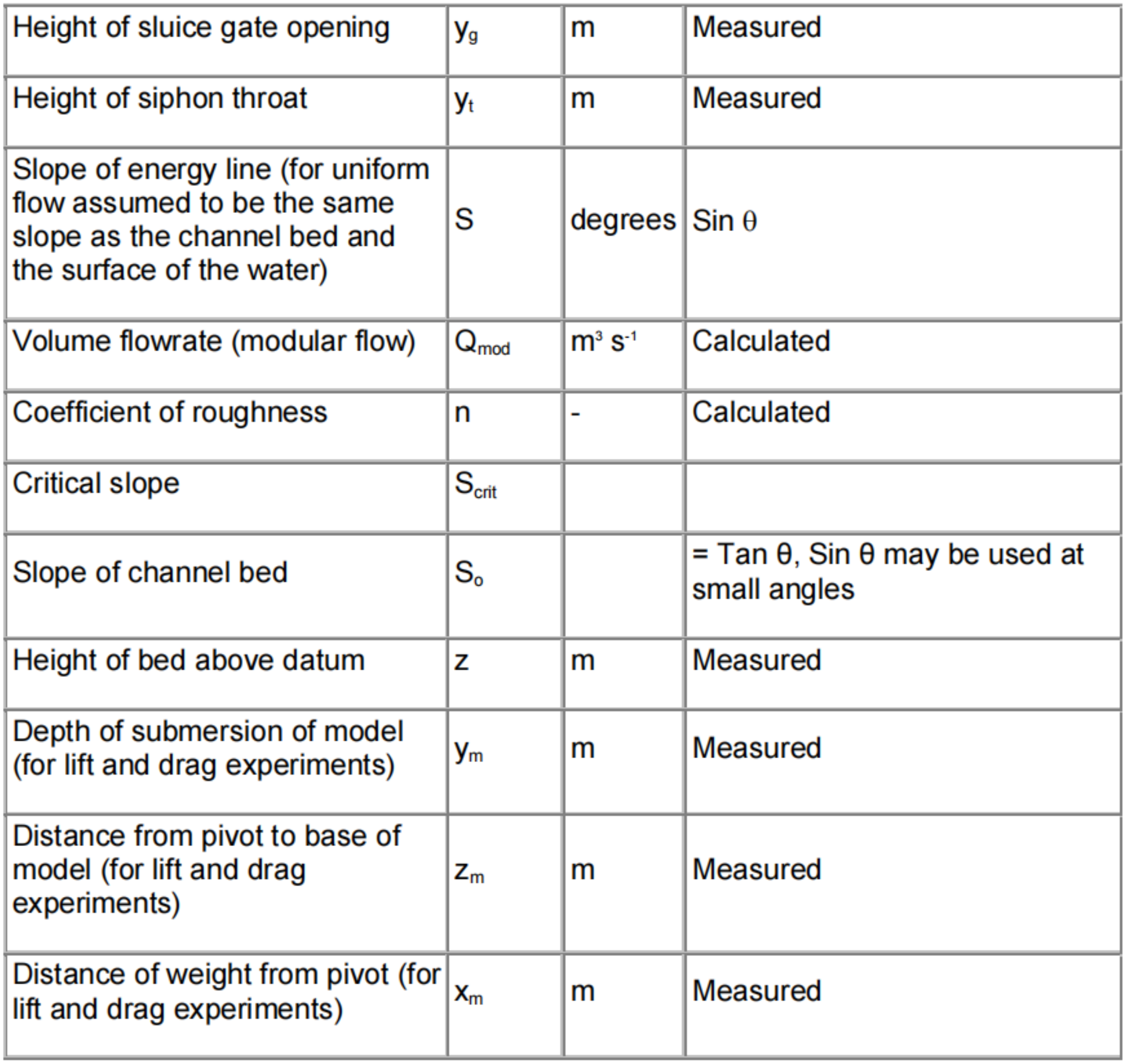

Height of sluice gate opening	y_g	m	Measured
Height of siphon throat	y_t	m	Measured
Slope of energy line (for uniform flow assumed to be the same slope as the channel bed and the surface of the water)	S	degrees	Sin θ
Volume flowrate (modular flow)	Q_{mod}	$m^3 s^{-1}$	Calculated
Coefficient of roughness	n	-	Calculated
Critical slope	S_{crit}		
Slope of channel bed	S_o		= Tan θ, Sin θ may be used at small angles
Height of bed above datum	z	m	Measured
Depth of submersion of model (for lift and drag experiments)	y_m	m	Measured
Distance from pivot to base of model (for lift and drag experiments)	z_m	m	Measured
Distance of weight from pivot (for lift and drag experiments)	x_m	m	Measured

The following subscripts are used for specific variables:

x Distance along the flume (scale on side of flume)

y Location across width of flume (scale on instrument carrier)

z Height above the bed of the flume (vertical level gauge)

Note: Where values for E and H cannot conveniently be measured then they should be computed using the expressions given above.

Data Sheet 3: Operating the S6-30 Pitot tube and manometer

The Pitot Tube with Paraffin over Water Manometer is an optional accessory (Armfield order code S6-30) and is used in conjunction with the S6 MKII Glass Sided Tilting Flume to measure the local velocity of water flowing through the working section.

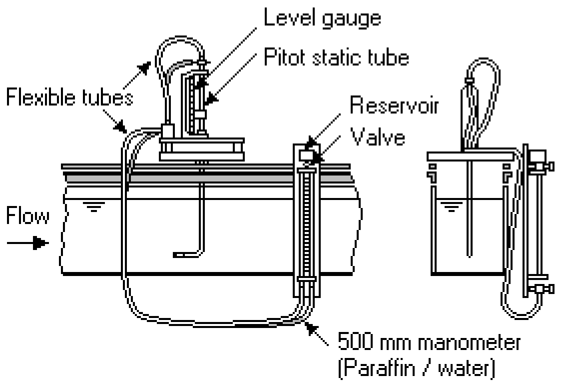

Installation

Partially fill the flume with water so that the head of the Pitot tube can be immersed when installed on the flume. The water in the flume should not be flowing during the priming procedure.

Before installing the Pitot tube and manometer on the flume it is necessary to prime them with water. Fill the manometer reservoir with water, ensuring that the valve at the base of the reservoir is closed. Position the manometer above the Pitot tube with the Pitot tube sloping uphill (cranked head at the top). Open the isolating valves at the base of the manometer.

Open the valve on the reservoir and allow water to flow through the flexible tubing until it flows through the static and total head holes in the Pitot tube. During the operation the reservoir must not be allowed to empty, as this would let air into the system. Ensure that there are no air bubbles in the assembly. Close the valve at the base of the reservoir on the manometer.

Set up the Pitot tube as shown in the diagram above, with the head of the tube immersed under water. Ensure that the reservoir on the manometer is filled with water with the valve closed. Raise the manometer above the flume then open the valve and allow water to flow through the assembly. Ensure no air remains in the pipework. Briefly raise the head of the Pitot tube above the level of the water in the flume and check that the water flows from both the static and total head holes.

Once again, the reservoir on the manometer must not be allowed to empty during the priming operation. If any air is trapped in the pipework the whole of the above procedure should be repeated. It is essential that no air is present, otherwise readings obtained will be meaningless.

Allow water to drain from the reservoir leaving a small amount in the base then close the isolating valves at the base of the manometer. Fill the reservoir with paraffin (Kerosene, Specific Gravity = 0.784) then open each isolating valve in turn to half fill each manometer tube with paraffin. Take care to avoid slugs of paraffin/water in the manometer tubes. When both tubes are correctly filled to mid height close the isolating valve at the base of the reservoir.

Close the isolating valves at the base of the manometer until the equipment is ready for use.

The Pitot tube and manometer are used for measuring low velocities of water in the flume. If used with excessively high velocities the paraffin will be pushed out of the manometer into the flexible tubing, which may result in paraffin entering the flume.

DO NOT open the valve at the base of the reservoir during operation.

Open the flume inlet valve and allow water to flow slowly through the flume. Carefully open the isolating valves at the base of the manometer and note the difference in levels in the two limbs of the manometer.

The velocity of the water is calculated as follows:

$$v = k\sqrt{\frac{2\,(p_t - p_s)}{\rho_f}}$$

For the Pitot tube

For the manometer (P_t - P_s) = g h (ρf - ρm)

Where:

v = Local Velocity of water at Pitot tube ($m\ s_{-1}$)

k = Pitot tube coefficient (can be assumed to be unity)

p_t = Total pressure ($N\ m_{-2}$)

p_s = Static pressure ($N\ m_{-2}$)

ρf = Density of operating fluid, water (= 1000kg m_{-3})

ρm = Density of manometer fluid, paraffin (= 784kg m_{-3})

= Difference in levels in manometer (m)

g = Acceleration due to gravity (ms_{-2})

therefore

Local velocity $$v = \sqrt{\frac{2\,g\,h\,(1000 - 784)}{1000}}$$

Local velocity $$v = \sqrt{4.24\ h}\ \ (\mathrm{m\ s^{-1}})$$

For defining the position of the Pitot tube relative to the flume the following convention is used:

x = distance along the flume (scale on side of flume)

y = location across flume

z = height above the bed of the flume (vertical level gauge)

These dimensions can be tabulated with the other results obtained.

This assembly can be used with many of the other accessories where velocities are required. The velocity profile in the flume can be obtained by moving the Pitot tube vertically and horizontally across the flume at different sections, noting the readings on the manometer at each position and converting these readings to a series of velocity profiles.

Refer to Data Sheet 7: Calibration of S6-30 Pitot Tube and Manometer for a calibration curve showing manometer reading against water velocity.

Data Sheet 4: Operating the S6-35 Wave Generator

The Wave Generator is an optional accessory (Armfield order code S6-35) and is used in conjunction with the S6 MKII Glass Sided Tilting Flume to propagate waves in the working section.

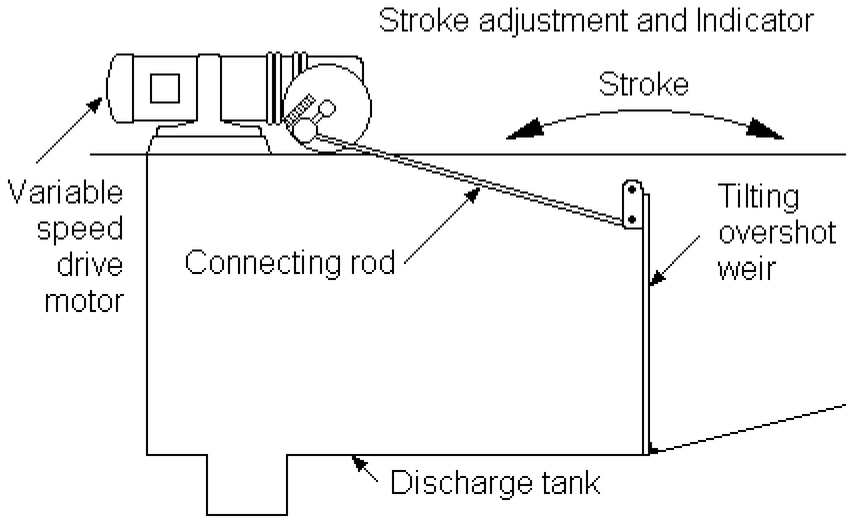

10.Determination of co-efficient of Discharge through Sluice Gate.

Exercise A - Discharge beneath a Sluice Gate (Undershot weir)

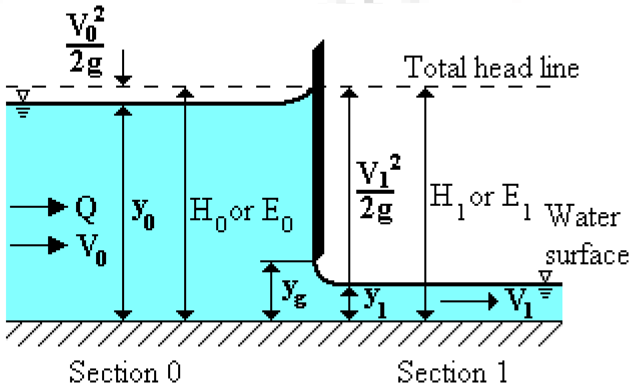

Objective

To investigate the characteristics of flow beneath an undershot weir and to determine the coefficient of discharge C_d for the weir.

Equipment Required

Glass Sided Tilting Flume (S6-MkII)

Adjustable Undershot Weir (Part of S6-20)

Instrument Carrier (S6-40) with Hook and Point Gauge (S6-41) - optional

Theory

For flow beneath a sharp-edged undershot weir it can be shown that:

$$Q = C_d\, b\, y_g \sqrt{2g\, y_0}$$

therefore:

$$C_d = \frac{Q}{b\, y_g \sqrt{2g\, y_0}}$$

Where:

Q = Volume flow rate of fluid in channel (m)

C_d = Coefficient of discharge (dimensionless)

b = Width of weir (m)

y_g = Height of weir opening (m)

g = Gravitational constant, 9.81 (m/s^2)

y_0 = Depth of flow upstream of weir (m)

$$H_0 = y_0 + \frac{V_0^{\,2}}{2g} = y_0 + \frac{Q^2}{2g\,(y_0\,b)^2}$$ where V_0 = Average velocity upstream

$$H_1 = y_1 + \frac{V_1^{\,2}}{2g} = y_1 + \frac{Q^2}{2g\,(y_1\,b)^2}$$ where V_1 = Average velocity downstream

Equipment Setup

- Ensure the flume is horizontal and that the downstream tilting weir is at the bottom of its travel.
- Measure and record the actual width b (m) of the undershot weir.
- Install the undershot weir towards the inlet end of the flume with the chamfer on the
- bottom edge facing downstream. Ensure that the assembly is securely clamped in
- position to resist the force of the water.
- Refer to Installing the Equipment if further information is required about the
- installation of the Adjustable Undershot Weir.

Procedure

- Adjust the undershot weir to set the bottom edge 20mm above the bed of the channel.
- Start the pump, gradually open the flow control valve then adjust the valve to give a depth of y_0 = 200mm as indicated by the S6-41 hook and point gauge upstream of the weir.
- Measure and record Q from the flowmeter, y_0 and y_1 by moving the hook and point gauge as required to make the measurements.
- Raise the undershot weir in increments of 10mm, maintaining y_0 at 200mm by varying the flow of water. At each level of the weir measure and record the values of Q, y_0, and y_1.
- Repeat the procedure with a constant flow Q allowing y_0 to vary, recording the values of Q, y_0 and y_1 as before.

Results

Width of undershot weir, b = ……………. (m)

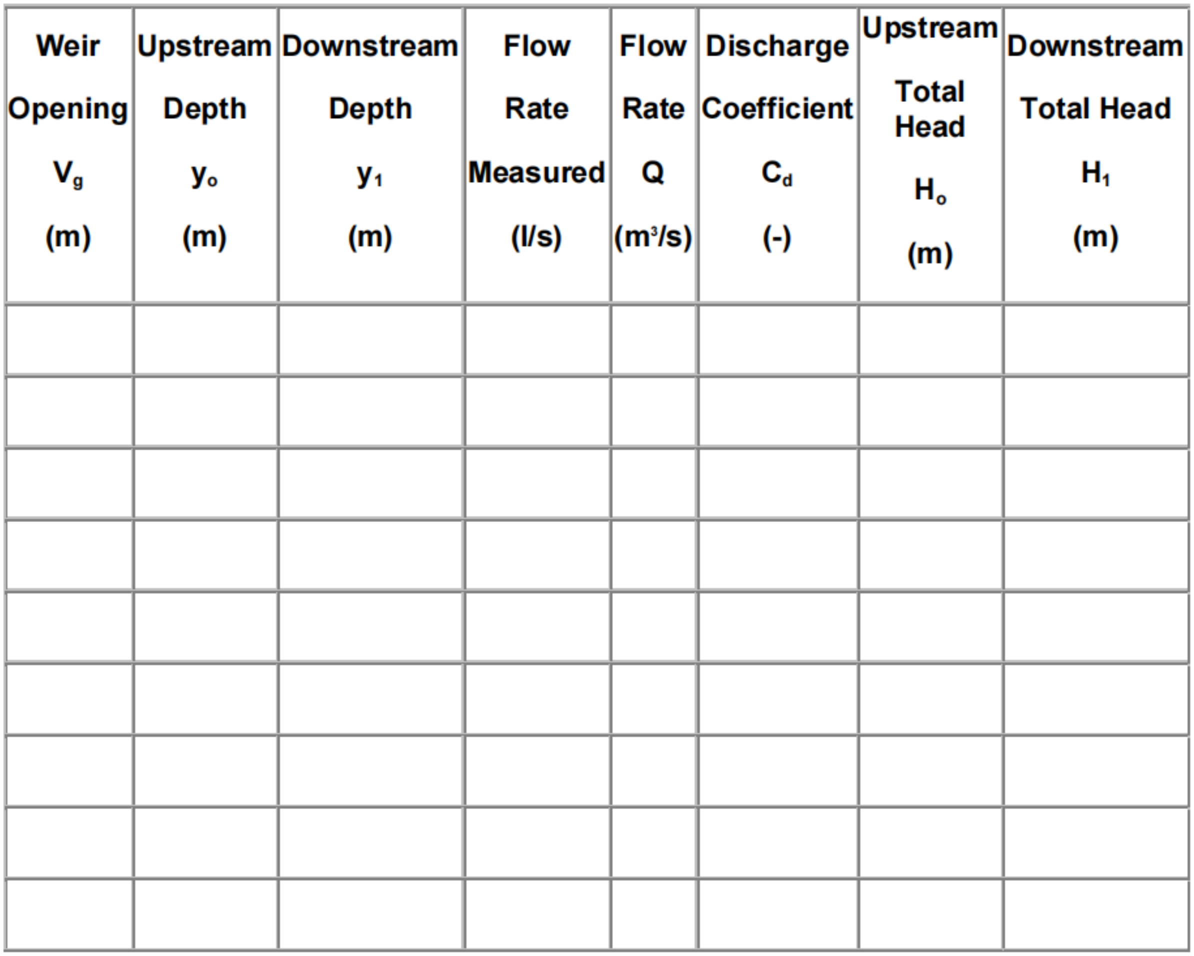

Weir Opening V_g (m)	Upstream Depth y_o (m)	Downstream Depth y_1 (m)	Flow Rate Measured (l/s)	Flow Rate Q (m^3/s)	Discharge Coefficient C_d (-)	Upstream Total Head H_o (m)	Downstream Total Head H_1 (m)

Plot graphs of Q against y_g for constant y_0 and y_0 against y_g for constant Q to show the characteristics of the flow beneath the weir.

Plot graphs of C_d against Q for constant y_0 and C_d against y_g for constant Q to show the changes in C_d of the flow beneath the weir.

Conclusion

Comment on the effect of y_o and Q on the discharge coefficient C_d for flow underneath the weir. Which factor has the greatest effect?

Comments on any discrepancies between actual and expected results.

Compare the values obtained for the total head H_0 upstream and H_1 downstream of the weir and comment on any differences.

11.Determination of Force on a Sluice Gate.

Exercise B - Force on a Sluice Gate (Undershot weir)

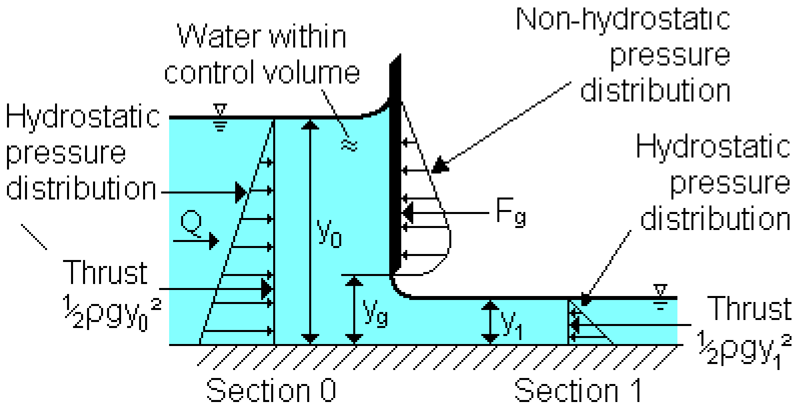

Objective

To determine the relationship between upstream head and thrust on an undershot weir for water flowing under the weir.

Equipment Required

- Glass Sided Tilting Flume (S6-MkII)
- Adjustable Undershot Weir (Part of S6-20)
- Instrument Carrier (S6-40) with Hook and Point Gauge (S6-41) - optional

Theory

It can be shown that the resultant force on the gate is given by the equation:

$$F_g = \frac{1}{2}\rho g b y_1^2 \left[\frac{y_0^2}{y_1^2} - 1\right] - \frac{\rho Q^2}{b y_1}\left[1 - \frac{y_1}{y_0}\right]$$

The gate thrust for a hydrostatic pressure distribution is given by the equation:

$$F_H = \frac{1}{2}\rho g \left(y_0 - y_g\right)^2$$

Where:
F_g = Resultant gate thrust (N)
F_H = Resultant hydrostatic thrust (N)
Q = Volume flow rate (m_3/s)
ρ = Density of fluid (kg/m³)
g = Gravitational constant, 9.81 (m/s²)

b = Width of weir (m)

y_g = Height of upstream opening (m)

y_0 = Upstream depth of flow (m)

y_1 = Downstream depth of flow (m)

Equipment Setup

To save time, the measurements obtained in Exercise A can be used to perform the calculations for this exercise.

If results are not available from Exercise A, the equipment should be setup as described in Exercise A.

Procedure

If results are not available from Exercise A, repeat the procedure described in Exercise A.

Results

Width of sluice gate, b = ……………. (m)

Weir Opening V_g (m)	Upstream Depth y_o (m)	Downstream Depth y_1 (m)	Flow Rate Measured (l/s)	Flow Rate Q (m^3/s)	Gate Thrust F_g (N)	Hydrostatic Thrust F_H (N)	$\frac{F_g}{F_H}$	$\frac{y_g}{y_0}$

Plot a graph of the ratio $\frac{F_g}{F_H}$ against the ratio $\frac{y_g}{y_0}$.

Conclusion

Compare your calculated values for F_g and F_H and comment on any differences.

What is the effect of flow rate on the results obtained?

Comment on the graph of $\frac{F_g}{F_H}$ against $\frac{y_g}{y_0}$.

12.Determination of Critical Depth and Derivation of Specific Energy Equation for a Sluice Gate.

Exercise C - Critical depth– Derivation of the Specific Energy Equation

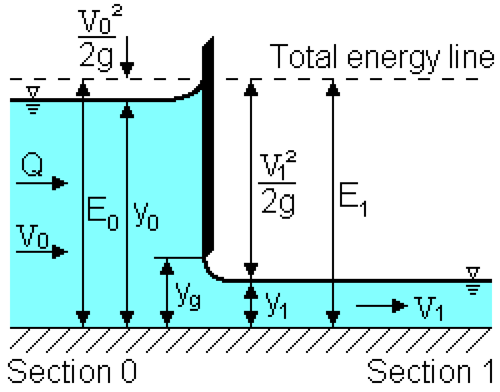

Objective

To determine the relationship between the Specific Energy and the upstream head for water flowing beneath an undershot weir.

Equipment Required

- Glass Sided Tilting Flume (S6-MkII)
- Adjustable Undershot Weir (Part of S6-20)
- Instrument Carrier (S6-40) with Hook and Point Gauge (S6-41) - optional

Theory

The depth and velocity of a given flow in any section of an open channel adapt themselves to the energy available at that section. For a constant discharge this energy reaches a minimum value at the 'critical' depth. This parameter is fundamental to a complete understanding of free flow behaviour because the response of a stream to energy (and force) depends on whether the actual depth is greater than or less than the critical depth.

In an open channel it is convenient to use the bed as the datum and to compare the Specific Energy at different sections where the Specific Energy is defined as the sum of the Potential Energy (the depth of flow) and the Kinetic Energy (the velocity head):

$$E = y + \frac{V^2}{2g}$$

Considering unit width of channel the equation becomes:

$$E = y + \frac{Q^2}{2gy^2}$$

Where:

E = Specific energy (m)

y = Depth of flow (m)

Q = Volume flow rate (m^3/s)

g = Gravitational constant, 9.81 (m/s^2)

Note: When the datum coincides with the bed, E = H

A plot of Specific Energy against depth of flow gives a curve called the Specific Energy curve, shown below. The shape of the curve shows that for a given Specific Energy there are two possible depths called the Alternate Depths. At point C on the curve the Specific Energy E_{crit} is a minimum with only one corresponding depth called the Critical Depth y_{crit}. The upper part of the curve is asymptotic to the flow depth (y = E) and the lower part of the curve is asymptotic to the flow depth (y = 0)

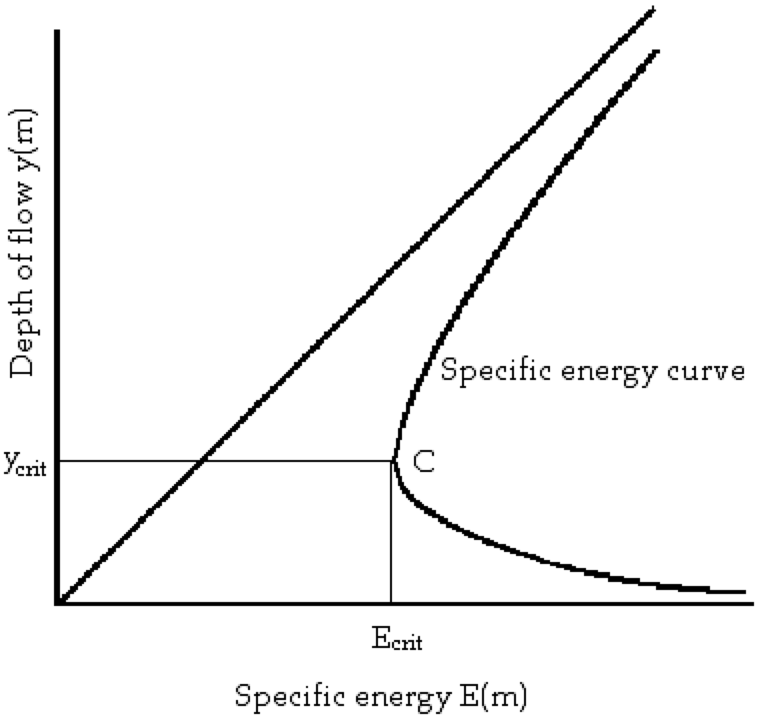

Flow at depths greater than critical is described as ‘slow’, ‘sub critical’ or tranquil’ flow.

Flow at depths less than critical is described as ‘fast’, ‘supercritical’ or ‘shooting’ flow.

A family of such curves will exist for different flow rates through the channel.

When considering a rectangular channel of unit width, where the streamlines are parallel, it can be shown that:

$$y_{crit} = \sqrt[3]{\frac{Q^2}{g}} \quad \text{and} \quad E_{crit} = E_{min} = \frac{3}{2} y_{crit}$$

Where:

E_{crit} = Minimum specific energy (m)

y_c = Critical depth (m)

When the slope of a channel is just sufficient to maintain a given flowrate at a uniform and critical depth, the slope is called the critical slope S_{crit}. It should be noted that the surface of the water may appear wavy when the flow is near to the critical state. This is because a small change in specific energy is accompanied by a large change in depth of flow - predicted by the shape of the Specific Energy curve.

Equipment Setup

Ensure the flume is horizontal and that the downstream tilting weir is at the bottom of its travel.

Measure and record the actual width b (m) of the undershot weir.

Install the undershot weir towards the inlet end of the flume with the chamfer on the bottom edge facing downstream. Ensure that the assembly is securely clamped in position to resist the force of the water.

Refer to the Assembly Instructions at the start of this manual if further information is required about the installation of the Adjustable Undershot Weir.

Procedure

- ➢ Adjust the undershot weir to set the bottom edge 10mm above the bed of the channel.
- ➢ Start the pump, gradually open the flow control valve then adjust the valve to give a depth of y_0 = 200mm as indicated by the hook and point gauge upstream of the weir.
- ➢ Measure and record Q from the flowmeter, y_0 and y_1 by moving the hook and point gauge as required to make the measurements.
- ➢ Raise the undershot weir in increments of 10mm. At each level of the weir allow the upstream and downstream levels to stabilise then measure and record the values of Q, y_0, and y_1.
- ➢ Increase the flowrate Q slightly, lower the weir until y_0 = 200mm. Measure and record Q then repeat the above measurements by gradually raising the undershot weir.
- ➢ Tilt the channel slightly in the direction of the flow (water flowing downhill), and gradually adjust the combination of flowrate and height of undershot weir until Critical Depth exists along the length of the channel. Note that the scale is graduated to give a slope of one in <scale reading>, e.g. a scale value of 200 is a slope of 1 in 200, or 0.3°.

Results

Width (width) of sluice gate, b = ……………. (m)

Weir Opening V_g (m)	Upstream Depth y_0 (m)	Downstream Depth y_1 (m)	Flow Rate Measured (l/s)	Flow Rate Q (m^3/s)	Specific Energy E_0	Specific Energy E_1	Specific Energy E_{crit}

Plot E_0 against y_0 and E_1 against y_1 to establish the shape of the curve on either side of the minimum energy point.

Plot your calculated values for E_{crit} on the same axes.

On your graph draw a line through the Critical Point on each curve to show the critical state (tranquil flow above the line, shooting flow below the line).

Conclusion

How is the Critical Depth y_{crit} affected by the flow rate Q?
How do your calculated values for E_{crit} agree with the corresponding minimum energy points on your plotted curves?
Was it easy to find the combination to give Critical Depth in the sloping channel?
How did you know that critical depth had been achieved?

13.Determination of Energy loss due to Hydraulic jump.

Exercise D - Hydraulic Jump

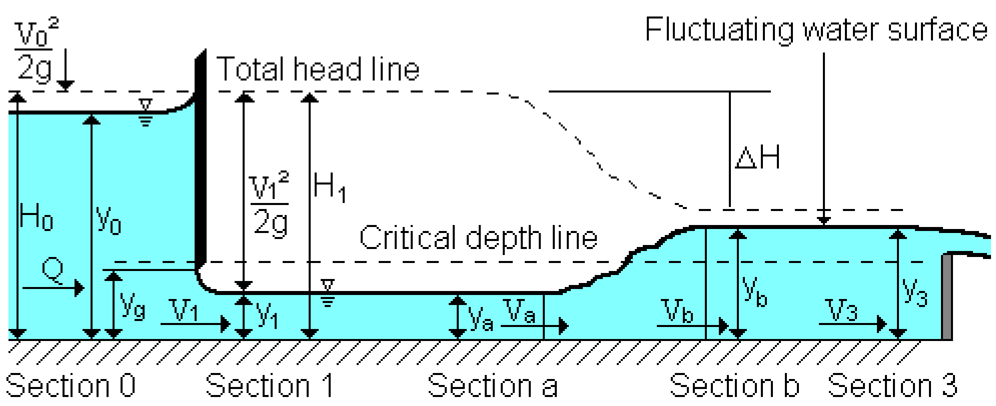

Objective

To investigate the characteristics of a standing wave (the hydraulic jump) produced when water flows beneath an undershot weir and to observe the flow patterns obtained (when fast flow changes to slow flow).

Equipment Required

- Glass Sided Tilting Flume (S6-MkII)
- Adjustable Undershot Weir (Part of S6-20)
- Instrument Carrier (S6-40) with Hook and Point Gauge (S6-41) - optional

Theory

When water flowing rapidly changes to slower tranquil flow a hydraulic jump or standing wave is produced. This phenomenon can be seen where water shooting under a sluice gate mixes with deeper water downstream. It occurs when a depth less than critical changes to a depth which is greater than critical and must be accompanied by a loss of energy. (Critical Depth was explained in Exercise C).

An Undular Jump occurs when the change in depth is small. The surface of the water undulates in a series of oscillations, which gradually decay to a region of smooth tranquil flow.

A direct jump occurs when the change in depth is great. The large amount of energy loss produces a zone of extremely turbulent water before it settles to smooth tranquil flow.

By considering the forces acting within the fluid on either side of a hydraulic jump of unit width it can be shown that:

$$\Delta H = y_a + \frac{V_a^{\,2}}{2g} - \left(y_b + \frac{V_b^{\,2}}{2g}\right)$$

Where:

Δh = Total head loss across jump (energy dissipated) (m)

V_a = Mean velocity before hydraulic jump (m/s)

y_a = Depth of flow before hydraulic jump (m)

V_b = Mean velocity after hydraulic jump (m/s)

y_b = Depth of flow after hydraulic jump (m)

Because the working section is short, $y_a \approx y_1$ and $y_b \approx y_3$

Therefore, simplifying the above equation:

$$\Delta H = \frac{(y_3 - y_1)^3}{4\, y_1\, y_3}$$

Equipment Setup

Ensure the flume is horizontal and that the downstream tilting weir is at the bottom of its travel.

Measure and record the actual width b (m) of the undershot weir.

Install the undershot weir towards the inlet end of the flume with the chamfer on the bottom edge facing downstream. Ensure that the assembly is securely clamped in position to resist the force of the water.

Refer to Assembly if further information is required about the installation of the Adjustable Undershot Weir.

Procedure

- Adjust the undershot weir to position the sharp edge of the weir 20mm above the bed of the channel.
- Gradually open the flow control valve and adjust the flow until the water level starts to rise upstream of the undershot weir. If necessary, increase the height of the tilting overshot weir slightly until the downstream level just starts to rise. Adjust the flow / downstream water level until an Undular Jump is created with small ripples decaying towards the discharge end of the working section. Observe and sketch the flow pattern.

- Increase the height of water upstream of the undershot weir by increasing the flowrate and increase the height of the tilting overshot weir to create a Hydraulic
- Jump (a Direct Jump) in the centre of the working section. If the jump travels towards
- the undershot weir then the downstream level is too deep and the tilting weir should be lowered slightly until the jump is stationary. Observe and sketch the flow pattern.
- Measure and record the values of y_1, y_3, y_g and Q. Repeat this for different flow rates Q and different heights of the undershot weir y_g.

Results

Width (width) of sluice gate, b = ……………. (m)

Weir Opening V_g (m)	**Upstream depth y_0 (m)**	**Depth before jump y_1 (m)**	**Depth after jump y_3 (m)**	**Flow Rate Measured (l/s)**	**Flow Rate Q (m^3/s)**	ΔH	**V1**	$\frac{\Delta H}{y_1}$	$\frac{y_3}{y_1}$

Calculate V_1 and plot gy_1 against V_1

Calculate $\frac{\Delta H}{y_1}$ and plot $\frac{\Delta H}{y_1}$ against y_3 / y_1

Calculate y_{crit} and verify $y_1 < y_{crit} < y_3$

Conclusion

Verify that the force of the stream on either side of the jump is the same and that the Specific Energy curve predicts a loss equal to

.

Suggest an application where the loss of energy in hydraulic jump would be desirable. How is the energy dissipated?

14.Determination of Characteristics of flow over a Dam spillway.

Exercise L - Characteristics of flow over a Dam Spillway

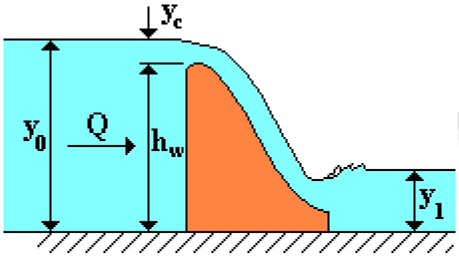

Objective

To observe the flow patterns associated with the flow of water over a dam spillway when the spillway is fitted with various interchangeable downstream sections.

Equipment Required

- Glass Sided Tilting Flume (S6-MkII)
- Dam Spillway with removable piers (Part of S6-24)
- Spillway Toe (Part of S6-24)
- Ski Jump (Part of S6-24)
- Energy Dispenser with Pegs (Part of S6-24)
- Gravel Box with Stop Logs (S6-24)
- Instrument Carrier (S6-40) with Hook and Point Gauge (S6-41) - optional

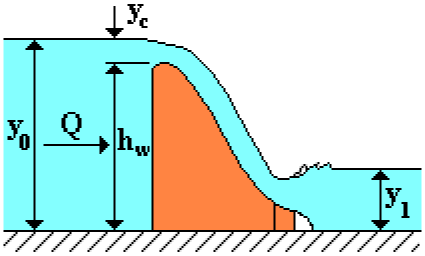

Dam Spillway fitted with Spillway Toe

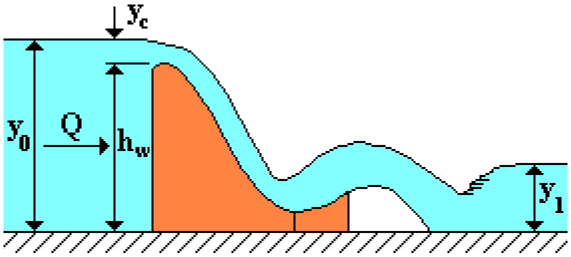

Dam Spillway fitted with Ski Jump

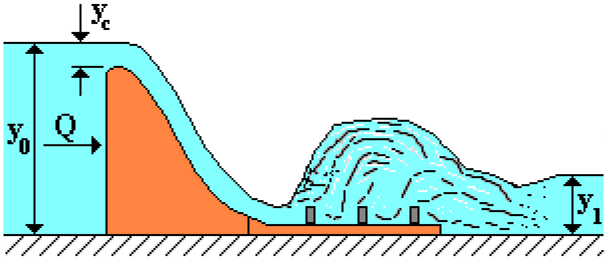

Dam Spillway fitted with Energy Dissipater using pegs

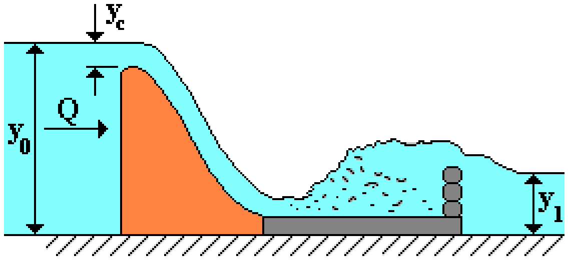

Dam Spillway fitted with Gravel Box and Stop Logs

Theory

Many designs of dam spillway exist, designed to accommodate such factors as flow volume, head, measurement requirements, and the need to avoid or reduce scouring of the downstream channel. The addition of piers, which are required in the design of gated spillways, further affect the flow characteristics. The Armfield Dam Spillway model provides a basic round-crested overflow spillway with a range of toe fittings, a downstream gravel box, and a pier accessory, allowing investigation of flow characteristics and energy dissipation in spillway flow.

Equipment Setup

- Ensure the flume is level, with the downstream tilting overshot weir at the bottom of its travel.
- Place the Dam Spillway in the working section towards the inlet end, with the crest facing upstream and the spillway toe fitted. Seal any gaps between the Dam Spillway and the flume sides (at the upstream end), using Plasticine.
- Refer to the Assembly Instructions at the start of this manual if further information is required about the installation of the Dam spillway.

Procedure

- ➢ Position the level gauge on the instrument rail, and record the datum reading, using the bed of the flume as the datum point.
- ➢ Adjust the flow control valve to vary the head in stages, with water flowing over the

spillway. At each stage, record the flow rate, measure the upstream and downstream water levels, and make sketches and notes on the flow patterns observed.

- The downstream water levels may be altered using the downstream tilting overshot weir, and the effects this has on flow patterns should be observed and sketched.
- Downstream level should be increased for each model until the toe of the spillway is fully submerged.
- Fit the piers to the top of the spillway, and repeat the procedure. This will provide a comparison between restricted and unrestricted flow conditions.
- Repeat the entire experiment with each model in turn. In the case of the gravel box and stop logs model, further variations can be accommodated by altering the height of the stop logs. The extent of the disturbed flow may be seen from the movement of the gravel.

Results

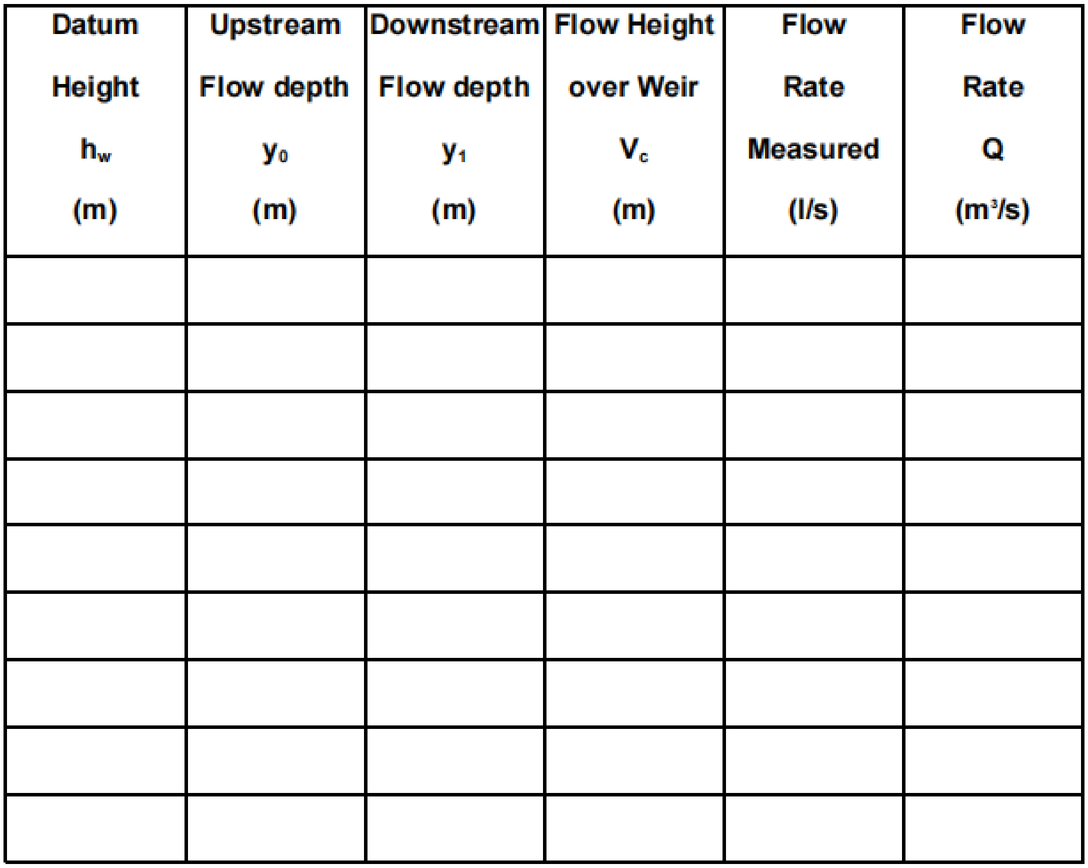

Datum Height h_w (m)	Upstream Flow depth y_0 (m)	Downstream Flow depth y_1 (m)	Flow Height over Weir V_c (m)	Flow Rate Measured (l/s)	Flow Rate Q (m^3/s)

Conclusion

Compare the various flow characteristics, and relate the observations made to problems concerning scour etc. in everyday practice.
Comment on the different methods of dissipating the kinetic energy of the water.
Which method is the most efficient?


Rajiv Gandhi University of Knowledge Technologies
IIIT Basar